M211840EN-G

User Guide

Vaisala Weather Transmitter

WXT530 Series

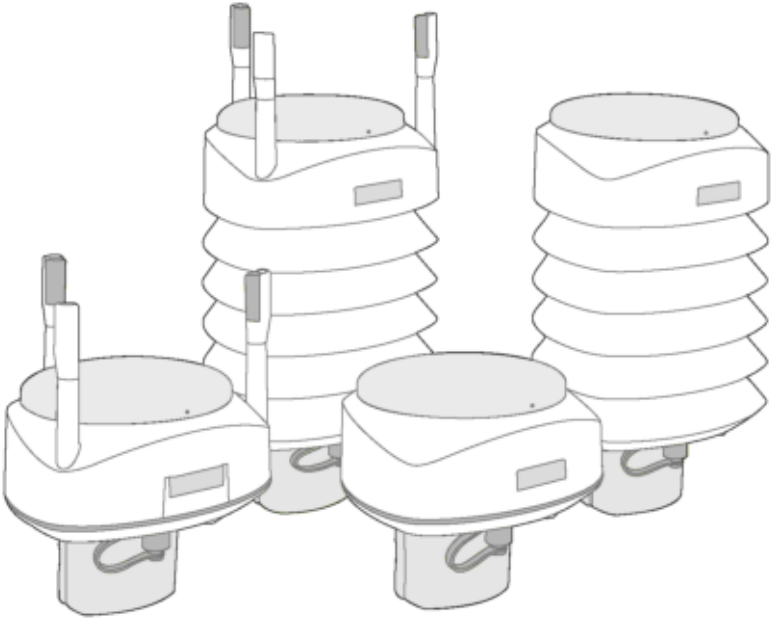

VAISALA

陕西威瑞仪器仪表有限公司 生产代理销售：实验检测设备 气象科学仪器设备
Tel:029-88186182 Web:www.qixiangzhan.cn Email:sxvery@163.com

PUBLISHED BY

Vaisala Oyj
Vanha Nurmijärventie 21, FI-01670 Vantaa, Finland
P.O. Box 26, FI-00421 Helsinki, Finland
+358 9 8949 1
www.vaisala.com
docs.vaisala.com

© Vaisala 2023

No part of this document may be reproduced, published or publicly displayed in any form or by any means, electronic or mechanical (including photocopying), nor may its contents be modified, translated, adapted, sold or disclosed to a third party without prior written permission of the copyright holder. Translated documents and translated portions of multilingual documents are based on the original English versions. In ambiguous cases, the English versions are applicable, not the translations.

The contents of this document are subject to change without prior notice.

Local rules and regulations may vary and they shall take precedence over the information contained in this document. Vaisala makes no representations on this document's compliance with the local rules and regulations applicable at any given time, and hereby disclaims any and all responsibilities related thereto.

This document does not create any legally binding obligations for Vaisala towards customers or end users. All legally binding obligations and agreements are included exclusively in the applicable supply contract or the General Conditions of Sale and General Conditions of Service of Vaisala.

This product contains software developed by Vaisala or third parties. Use of the software is governed by license terms and conditions included in the applicable supply contract or, in the absence of separate license terms and conditions, by the General License Conditions of Vaisala Group.

陕西威瑞仪器仪表有限公司 生产代理销售：实验检测设备 气象科学仪器设备
Tel:029-88186182 Web:www.qixiangzhan.cn Email:sxvery@163.com

Table of contents

1. About this document 13
1.1 Version information 13
1.2 Related manuals 13
1.3 Documentation conventions 14
1.4 Trademarks 14

2. Product overview 15
2.1 WXT530 Series weather transmitters 15
2.1.1 WXT536 17
2.1.2 WXT535 and WXT534 18
2.1.3 WXT533 and WXT532 18
2.1.4 WXT531 19
2.2 Components 20
2.3 Optional features 22
2.3.1 USB cables 23
2.3.2 Mounting kit 24
2.3.3 Surge protector 25
2.3.4 Bird kit 26
2.3.5 Vaisala Configuration Tool 27
2.3.6 Sensor heating 27
2.4 Backward compatibility 28
2.5 ESD protection 28
2.6 FCC Part 15 compliance statement 28

3. Functional description 30
3.1 Wind measurement principle 30
3.2 Precipitation measurement principle 31
3.3 PTU measurement principle 32
3.4 Heating 33
3.5 Analog input interface 34
3.6 Analog output interface 34

4. Installation 35
4.1 Installing WXT530 35
4.1.1 Maritime installations 35
4.2 Placing WXT530 35
4.3 Unpacking WXT530 37
4.4 Mounting WXT530 39
4.4.1 Mounting WXT530 on vertical pole mast without mounting kit 39
4.4.2 Mounting WXT530 on vertical pole mast with mounting kit 41
4.4.3 Mounting WXT530 on sensor support arm 43
4.5 Grounding 45
4.5.1 Grounding with bushing and grounding kit 45
4.6 Aligning WXT530 46
4.6.1 Aligning WXT530 with compass 48
4.6.2 Configuring wind direction offset 48

陕西威瑞仪器仪表有限公司 生产代理销售：实验检测设备 气象科学仪器设备
Tel:029-88186182 Web:www.qixiangzhan.cn Email:sxvery@163.com

4.7 Installing Vaisala Configuration Tool....49
4.8 Installing USB cable driver....50

5. Power management....53
5.1 Power supplies....53
5.2 Power management....56
5.3 Wiring with 8-pin M12 connector....59
5.3.1 External wiring....59
5.3.2 Internal wiring....62
5.4 Wiring with screw terminals....65
5.5 Data communication interfaces....68

6. Connection options....70
6.1 Communication protocols....70
6.2 Connection cables....70
6.3 Connecting with service cable....71
6.3.1 Connecting through M12 bottom connector or screw terminal....73
6.4 Communication setting commands....73
6.4.1 Checking current communication settings (aXU)....73
6.4.2 Settings fields....74
6.4.3 Changing the communication settings (aXU)....76

7. Retrieving data messages....79
7.1 General commands....79
7.1.1 Reset (aXZ)....79
7.1.2 Precipitation counter reset (aXZRU)....80
7.1.3 Precipitation intensity reset (aXZRI)....81
7.1.4 Measurement reset (aXZM)....82
7.2 ASCII protocol....82
7.2.1 Abbreviations and units....82
7.2.2 Device address (?)....84
7.2.3 Acknowledge active command (a)....84
7.2.4 Wind data message (aR1)....85
7.2.5 Pressure, temperature and humidity data message (aR2)....86
7.2.6 Precipitation data message (aR3)....86
7.2.7 Supervisor data message (aR5)....87
7.2.8 Combined data message (aR)....88
7.2.9 Composite data message query (aR0)....88
7.2.10 Polling with CRC....89
7.2.11 Automatic mode....90
7.2.12 Automatic composite data message (aR0)....91
7.3 SDI-12 protocol....91
7.3.1 Address query command (?)....92
7.3.2 Acknowledge active command (a)....93
7.3.3 Change address command (aAb)....93
7.3.4 Send identification command (aI)....94
7.3.5 Start measurement command (aM)....95
7.3.6 Start measurement command with CRC (aMC)....96

陕西威瑞仪器仪表有限公司 生产代理销售：实验检测设备 气象科学仪器设备
Tel:029-88186182 Web:www.qixiangzhan.cn Email:sxvery@163.com

7.3.7 Start concurrent measurement (aC)..... 96
7.3.8 Start concurrent measurement with CRC (aCC)..... 97
7.3.9 Send data command (aD)..... 98
7.3.10 Examples of aM, aC and aD commands..... 99
7.3.11 Continuous measurement (aR)..... 101
7.3.12 Continuous measurement with CRC (aRC)..... 102
7.4 NMEA 0183 v3.0 protocol..... 102
7.4.1 Device address (?)..... 103
7.4.2 Acknowledge active command (a)..... 103
7.4.3 MWV wind speed and direction query..... 104
7.4.4 XDR transducer measurement query..... 105
7.4.5 TXT text transmission..... 113
7.4.6 Automatic mode..... 114
7.4.7 Automatic composite data message (aR0)..... 115

8. Sensor and data message settings..... 116
8.1 Wind sensor..... 116
8.1.1 Checking the settings (aWU)..... 116
8.1.2 Setting fields..... 117
8.1.3 Changing the settings (aWU)..... 119
8.2 Pressure, temperature, and humidity sensors..... 121
8.2.1 Checking the settings (aTU)..... 121
8.2.2 Setting fields..... 122
8.2.3 Changing the settings (aTU)..... 124
8.3 Precipitation sensor..... 125
8.3.1 Checking the settings (aRU)..... 125
8.3.2 Setting fields..... 126
8.3.3 Changing the settings (aRU)..... 129
8.4 Supervisor message..... 131
8.4.1 Checking the settings (aSU)..... 131
8.4.2 Setting fields..... 131
8.4.3 Changing the settings (aSU)..... 133
8.5 Composite data message (aR0)..... 134
8.6 Analog input..... 135
8.6.1 Enabling and disabling analog input..... 137
8.6.2 Common sensor settings (aIU)..... 138
8.6.3 Aux input averaging time [A]..... 138
8.6.4 Parameter selection [R]..... 138
8.6.5 Getting data messages..... 139
8.6.6 Aux rain sensor settings [aIA]..... 139
8.6.7 Solar radiation sensor settings [aIB]..... 140
8.6.8 Ultrasonic level sensor settings [aIS]..... 140
8.6.9 Aux.temperature sensor settings [aIP]..... 141
8.6.10 Parameter order for SDI-12 mode..... 141

陕西威瑞仪器仪表有限公司 生产代理销售：实验检测设备 气象科学仪器设备
Tel:029-88186182 Web:www.qixiangzhan.cn Email:sxvery@163.com

8.7 Analog output 141
8.7.1 Analog output operation 141
8.7.2 Analog output scaling 142
8.7.3 Analog output signal for wind speed channel 143
8.7.4 Analog output signal for wind direction channel 143
8.7.5 Enabling or disabling analog output 144

9. Maintenance 145
9.1 Cleaning 145
9.2 Cleaning radiation shield 145
9.3 Replacing PTU module 145

10. Troubleshooting 149
10.1 Self-diagnostics 151
10.1.1 Error messaging/text messages 151
10.1.2 Rain and wind sensor heating control 153
10.1.3 Operating voltage control 153
10.1.4 Missing readings and error indication 153

11. Technical specifications 154
11.1 WXT530 specifications 154
11.2 Type label 165
11.3 Options and accessories 166

Appendix A: Networking 168
A.1 Connecting several transmitters on same bus 168
A.2 SDI-12 serial interface 168
A.2.1 Wiring SDI-12 168
A.2.2 SDI-12 communication protocol 168
A.3 RS-485 serial interface 169
A.3.1 RS-485 wiring 169
A.3.2 RS-485 communication protocol 169
A.3.3 ASCII, polled 169
A.3.4 NMEA 0183 v 3.0 query 170
A.3.5 NMEA 0183 v 3.0 query with ASCII query commands 171

Appendix B: Modbus protocol 173
B.1 Modbus RTU protocol for WXT530 173
B.2 Register maps 174
B.2.1 Holding registers 175
B.2.2 Input registers 176
B.2.3 Derived parameters and sampling 182
B.2.4 Supported WXT536 analog inputs and sampling 184
B.2.5 Wind measurement sampling 184
B.2.6 PTU measurement sampling 184
B.3 Diagnostics 185
B.3.1 Read device identification 185
B.4 Function codes 185

陕西威瑞仪器仪表有限公司 生产代理销售：实验检测设备 气象科学仪器设备
Tel:029-88186182 Web:www.qixiangzhan.cn Email:sxvery@163.com

B.5 Modbus configuration....186
B.5.1 Updating WXT530 firmware....186
B.5.2 Changing from CLI mode to Modbus mode....187
B.5.3 Changing from Modbus mode to CLI mode....187
B.5.4 Changing port settings....188
B.5.5 Changing Modbus address in CLI mode....189
B.5.6 Using Modbus with old WXT530....189

Appendix C: External sensors....190
C.1 Connecting ultrasonic level sensor to WXT536....190
C.2 Connecting pyranometer to WXT536....191
C.3 Connecting temperature sensor to WXT536....193
C.4 Connecting rain gauge to WXT536....195

Appendix D: SDI-12 protocol....197
D.1 SDI-12 electrical interface....197
D.1.1 SDI-12 communications protocol....197
D.1.2 SDI-12 timing....197

Appendix E: CRC-16 computation....199
E.1 Encoding CRC as ASCII characters....199
E.2 NMEA 0183 v3.0 checksum computation....199

Appendix F: Wind measurement averaging method....200

Appendix G: Factory configurations....202
G.1 General unit settings....202
G.2 Wind configuration settings....202
G.3 PTU configuration settings....203
G.4 Rain configuration settings....203
G.5 Supervisor settings....204

Appendix H: Complete set of accessories....205

Appendix I: Configuration parameters....208

Appendix J: DNV certificate....217

Appendix K: Recycling instructions....218

Index....219

Warranty....225

Recycling....225

Technical support....225

陕西威瑞仪器仪表有限公司 生产代理销售：实验检测设备 气象科学仪器设备
Tel:029-88186182 Web:www.qixiangzhan.cn Email:sxvery@163.com

List of figures

Figure 1 WXT536....17
Figure 2 WXT535 and WXT534....18
Figure 3 WXT533 and WXT532....19
Figure 4 WXT531....20
Figure 5 WXT536 components....20
Figure 6 Cut-away view of WXT536....21
Figure 7 Bottom of WXT536....22
Figure 8 WXT536 with bird kit....26
Figure 9 Vaisala Configuration Tool....27
Figure 10 Analog inputs for external sensors....34
Figure 11 Package contents....37
Figure 12 WXT530 North arrow....47
Figure 13 Magnetic declination....48
Figure 14 Average operational current consumption (with 4 Hz wind sensor sampling)....54
Figure 15 Heating instant current and power vs Vh (WXT536, WXT535, WXT533, and WXT532)....55
Figure 16 Heating instant current and power vs Vh (WXT531)....55
Figure 17 PTU power consumption in RS-232, RS-485, RS-422, and SDI-12 continuous modes....57
Figure 18 PTU power consumption in SDI-12 native mode....58
Figure 19 Pins of 8-pin M12 connector....60
Figure 20 Internal wiring for RS-232, SDI-12, and RS-485....65
Figure 21 Screw terminal block....66
Figure 22 Data communication interfaces....68
Figure 23 Termination jumper positions....69
Figure 24 Service cable connection....72
Figure 25 Analog input connector pins....135
Figure 26 Analog input settings in Vaisala Configuration Tool....136
Figure 27 WXT531 dimensions....161
Figure 28 WXT533 and WXT532 dimensions....162
Figure 29 WXT535 and WXT534 dimensions....163
Figure 30 WXT536 dimensions....164
Figure 31 WXT530 mounting kit (212792) dimensions....165
Figure 32 Type label....166
Figure 33 Ultrasonic level sensor settings....191
Figure 34 Solar radiation sensor setting in configuration tool....192
Figure 35 Connecting temperature sensor to WXT536....193
Figure 36 Temperature sensor setting....194
Figure 37 Update interval and averaging time interval....195
Figure 38 Rain sensor setting....196
Figure 39 Timing diagram....198

陕西威瑞仪器仪表有限公司 生产代理销售：实验检测设备 气象科学仪器设备
Tel:029-88186182 Web:www.qixiangzhan.cn Email:sxvery@163.com

Figure 40 Wind measurement averaging method....201
Figure 41 Complete set of accessories....205
Figure 42 WXT536 with surge protector WSP150....206
Figure 43 WXT536 with surge protector WSP152....207

陕西威瑞仪器仪表有限公司 生产代理销售：实验检测设备 气象科学仪器设备
Tel:029-88186182 Web:www.qixiangzhan.cn Email:sxvery@163.com

List of tables

Table 1 Document versions (English)..... 13
Table 2 Related manuals..... 13
Table 3 WXT530 series features..... 16
Table 4 Available options..... 16
Table 5 WXT536 measurements..... 17
Table 6 WXT534 and WXT535 measurements..... 18
Table 7 WXT533 and WXT532 measurements..... 18
Table 8 WXT531 measurements..... 19
Table 9 Precipitation sensor modes..... 32
Table 10 Heater resistance..... 33
Table 11 Standby power consumption..... 56
Table 12 Economic power management..... 58
Table 13 Pinouts for WXT530 series serial interfaces and power supplies..... 60
Table 14 Screw terminal pinouts..... 60
Table 15 WXT532 mA output option screw terminal pinouts..... 61
Table 16 RS-232 wiring..... 62
Table 17 RS-485 wiring..... 63
Table 18 SDI-12 wiring..... 63
Table 19 RS-422 wiring..... 64
Table 20 mA output wiring..... 64
Table 21 Screw terminal pinouts for serial interfaces and power supplies..... 66
Table 22 Available serial communication protocols..... 70
Table 23 Connection cable options..... 71
Table 24 Default serial communication settings for M12/screw terminal connection..... 73
Table 25 Abbreviations and units..... 82
Table 26 Transducer IDs of measurement parameters..... 107
Table 27 Transducer table..... 113
Table 28 Wind parameters bits 1-8..... 117
Table 29 Wind parameters bits 9-16..... 118
Table 30 PTU parameters bits 1-8..... 122
Table 31 PTU parameters bits 9-16..... 123
Table 32 Precipitation parameters Bits 1-8..... 126
Table 33 Precipitation parameters Bits 9-16..... 127
Table 34 Supervisor parameters bits 1-8..... 132
Table 35 Supervisor parameters bits 9-16..... 132
Table 36 Analog input signals..... 135
Table 37 Analog input setting definitions..... 136
Table 38 aIU setting fields [R]..... 138
Table 39 Analog output scaling..... 142
Table 40 WXT530 maintenance..... 145
Table 41 Data validation..... 149
Table 42 Communication problems..... 150
Table 43 Error messaging/text messages..... 152
Table 44 Barometric pressure measurement performance..... 154

陕西威瑞仪器仪表有限公司 生产代理销售：实验检测设备 气象科学仪器设备
Tel:029-88186182 Web:www.qixiangzhan.cn Email:sxvery@163.com

Table 45 Air temperature measurement performance..... 154
Table 46 Relative humidity measurement performance..... 154
Table 47 Precipitation measurement performance.....155
Table 48 Wind measurement performance.....155
Table 49 Inputs and outputs.....156
Table 50 WXT536 analog input options..... 157
Table 51 WXT530 analog mA output options..... 157
Table 52 Operating environment.....157
Table 53 Mechanical specifications..... 158
Table 54 Compliance..... 158
Table 55 Electromagnetic compatibility..... 159
Table 56 Options and accessories..... 166
Table 57 WXT530 default Modbus settings..... 173
Table 58 Register ranges..... 174
Table 59 Holding registers.....175
Table 60 Device status.....176
Table 61 Commonly used unit system independent values..... 176
Table 62 Measurement values in metric units (°C, m/s, mm, mm/h).....178
Table 63 Measurement values in imperial units (°F, mph, in, in/h).....179
Table 64 Other measurement values.....180
Table 65 Temperature.....182
Table 66 Humidity.....182
Table 67 Pressure.....183
Table 68 Air density..... 183
Table 69 Precipitation.....183
Table 70 External analog inputs.....184
Table 71 Wind measurement sampling.....184
Table 72 PTU measurement.....184
Table 73 Read device identification..... 185
Table 74 Function codes.....186
Table 75 Ultrasonic level connections..... 190
Table 76 Pyranometer connections.....192
Table 77 Wiring temperature sensor to WXT536.....194
Table 78 Rain gauge connections..... 195
Table 79 General unit settings..... 202
Table 80 Wind configuration settings.....203
Table 81 PTU configuration settings..... 203
Table 82 Rain configuration settings..... 204
Table 83 Supervisor settings.....204
Table 84 General parameters..... 208
Table 85 Pressure, temperature and humidity parameters..... 210
Table 86 Wind parameters.....211
Table 87 Precipitation parameters.....212
Table 88 Auxiliary sensor parameters.....213
Table 89 Analog mA output parameters.....215

陕西威瑞仪器仪表有限公司 生产代理销售：实验检测设备 气象科学仪器设备
Tel:029-88186182 Web:www.qixiangzhan.cn Email:sxvery@163.com

陕西威瑞仪器仪表有限公司 生产代理销售：实验检测设备 气象科学仪器设备
Tel:029-88186182 Web:www.qixiangzhan.cn Email:sxvery@163.com

1. About this document

1.1 Version information

Table 1 Document versions (English)

Document code	Date	Description
M211840EN-G	May 2023	Updated information on Modbus protocol. Updated information on grounding conductor size. Updated cable code from 225952 to CBL210679. Updated Vaisala Configuration Tool version. Updated ASCII protocol abbreviations and units with analog input parameters. Updated information about power consumption. Updated information about the saturation of cumulative rain measurement.
M211840EN-F	May 2022	Updated information on Modbus protocol. Updated specifications. Updated information on external sensors. Updated FCC information.
M211840EN-E	August 2020	Added information on Modbus protocol. Updated information on PTU module. Updated cable information. Added recycling information.

1.2 Related manuals

Table 2 Related manuals

Document code	Name
M211974EN	*Vaisala WXT536 Weather Parameter Hub Quick Guide*
M212051EN	*Updating WXT530 Series Software through RS-485 or RS-232 Data Port Technical Note*
M212053EN	*Updating WXT530 Software through Service Port Technical Note*
M212492EN	*Replacing WXT530 Series Bottom Assembly*
M210927EN	*Bird Spike Kit for WXT and WMT Transmitters Quick Reference Guide*

陕西威瑞仪器仪表有限公司 生产代理销售：实验检测设备 气象科学仪器设备
Tel:029-88186182 Web:www.qixiangzhan.cn Email:sxvery@163.com

1.3 Documentation conventions

WARNING! Warning alerts you to a serious hazard. If you do not read and follow instructions carefully at this point, there is a risk of injury or even death.

CAUTION! Caution warns you of a potential hazard. If you do not read and follow instructions carefully at this point, the product could be damaged or important data could be lost.

Note highlights important information on using the product.

Tip gives information for using the product more efficiently.

Lists tools needed to perform the task.

Indicates that you need to take some notes during the task.

1.4 Trademarks

Vaisala®, BAROCAP®, HUMICAP®, RAINCAP®, and WINDCAP® are registered trademarks of Vaisala Oyj.

Microsoft® and Windows® are either registered trademarks or trademarks of Microsoft Corporation in the United States and other countries.

Modbus® is a registered trademark of Schneider Automation Inc.

All other product or company names that may be mentioned in this publication are trade names, trademarks, or registered trademarks of their respective owners.

陕西威瑞仪器仪表有限公司 生产代理销售：实验检测设备 气象科学仪器设备
Tel:029-88186182 Web:www.qixiangzhan.cn Email:sxvery@163.com

2. Product overview

2.1 WXT530 Series weather transmitters



WXT536



WXT535
WXT534



WXT533
WXT532



WXT531

The WXT530 series transmitters are suitable for several purposes, such as:

- Agro-meteorological applications
- Building control systems
- Cruisers
- Energy applications
- Environmental monitoring
- Fire weather
- Meteorological test beds
- Noise monitoring
- Researchers
- Sport events
- Weather stations

The WXT530 models offer the following measurement combinations.

WXT536	WXT535	WXT534	WXT533	WXT532	WXT531
P ●	P ●	P ●	P ☐	P ☐	P ☐
T ●	T ●	T ●	T ☐	T ☐	T ☐
U ●	U ●	U ●	U ☐	U ☐	U ☐
R ●	R ●	R ☐	R ●	R ☐	R ●
W ●	W ☐	W ☐	W ●	W ●	W ☐

P Pressure
T Temperature
U Humidity
R Rain
W Wind

陕西威瑞仪器仪表有限公司 生产代理销售：实验检测设备 气象科学仪器设备
Tel:029-88186182 Web:www.qixiangzhan.cn Email:sxvery@163.com

Table 3 WXT530 series features

Feature	Value / Description
Transmitter power-up	5 ... 32 V DC
Communication protocols	• SDI-12 • ASCII automatic and polled • NMEA 0183 with query option • Modbus RTU
Serial interface options	• RS-232 • RS-485 • RS-422 • SDI-12
Connectors	• 8-pin M12 connector • 4-pin M8 connector for service use
IP rating	Without mounting kit IP65, with mounting kit IP66

Table 4 Available options

Available options	WXT536	WXT535	WXT534	WXT533	WXT532	WXT531
Service pack 2: Windows-based Vaisala Configuration Tool software with USB service cable (1.4 m)	✔	✔	✔	✔	✔	✔
USB RS-232/RS-485 cable (1.4 m)	✔	✔	✔	✔	✔	✔
Mounting kit	✔	✔	✔	✔	✔	✔
Surge protector	✔	✔	✔	✔	✔	✔
Bird kit	✔	✔	✔	✔	✔	✔
Shielded cables (2 m, 10 m, 40 m)	✔	✔	✔	✔	✔	✔
Bushing and grounding kit	✔	✔	✔	✔	✔	✔
Heating	✔	✔		✔	✔	✔
Analog input option	✔					
mA output option					✔	

陕西威瑞仪器仪表有限公司 生产代理销售：实验检测设备 气象科学仪器设备
Tel:029-88186182 Web:www.qixiangzhan.cn Email:sxvery@163.com

2.1.1 WXT536

Table 5 WXT536 measurements

Sensor	Pressure	Temperature	Humidity	Rain	Wind speed	Wind direction
WXT536	✓	✓	✓	✓	✓	✓

WXT536 offers an analog input option.

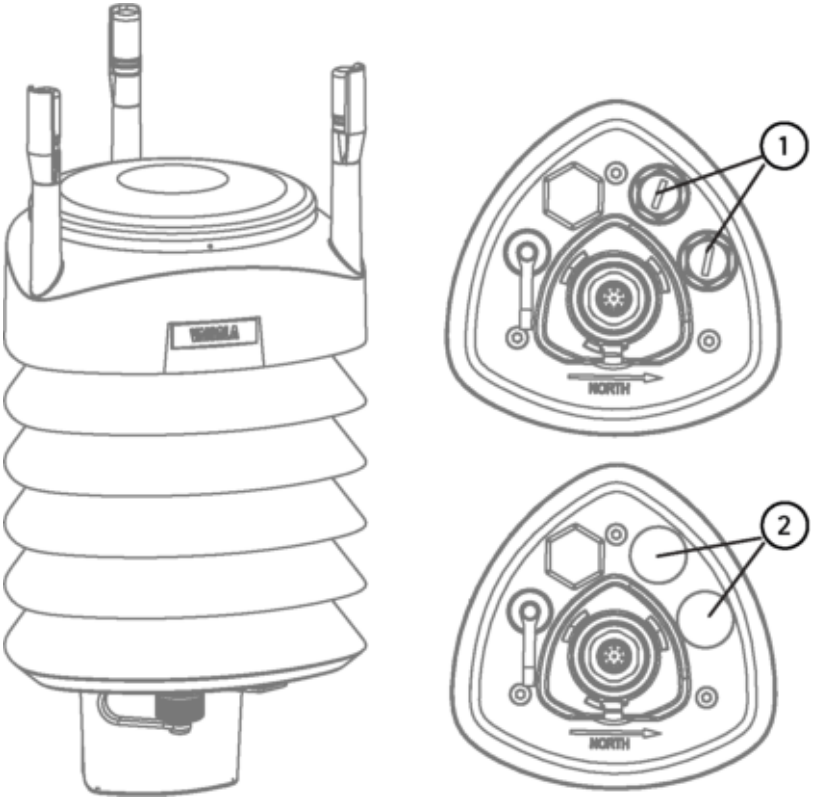

Figure 1 WXT536

1 Analog input option
2 Analog input option not ordered

陕西威瑞仪器仪表有限公司 生产代理销售：实验检测设备 气象科学仪器设备
Tel:029-88186182 Web:www.qixiangzhan.cn Email:sxvery@163.com

2.1.2 WXT535 and WXT534

Table 6 WXT534 and WXT535 measurements

Sensor	Pressure	Temperature	Humidity	Rain	Wind speed	Wind direction
WXT535	✓	✓	✓	✓		
WXT534	✓	✓	✓			

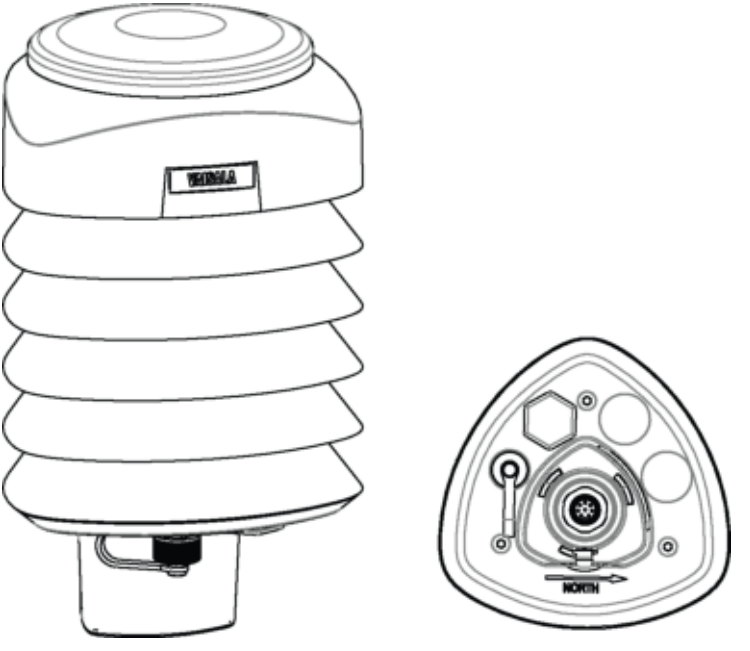

Figure 2 WXT535 and WXT534

2.1.3 WXT533 and WXT532

Table 7 WXT533 and WXT532 measurements

Sensor	Pressure	Temperature	Humidity	Rain	Wind speed	Wind direction
WXT533				✓	✓	✓
WXT532					✓	✓

陕西威瑞仪器仪表有限公司 生产代理销售：实验检测设备 气象科学仪器设备
Tel:029-88186182 Web:www.qixiangzhan.cn Email:sxvery@163.com

WXT532 offers an mA output option.

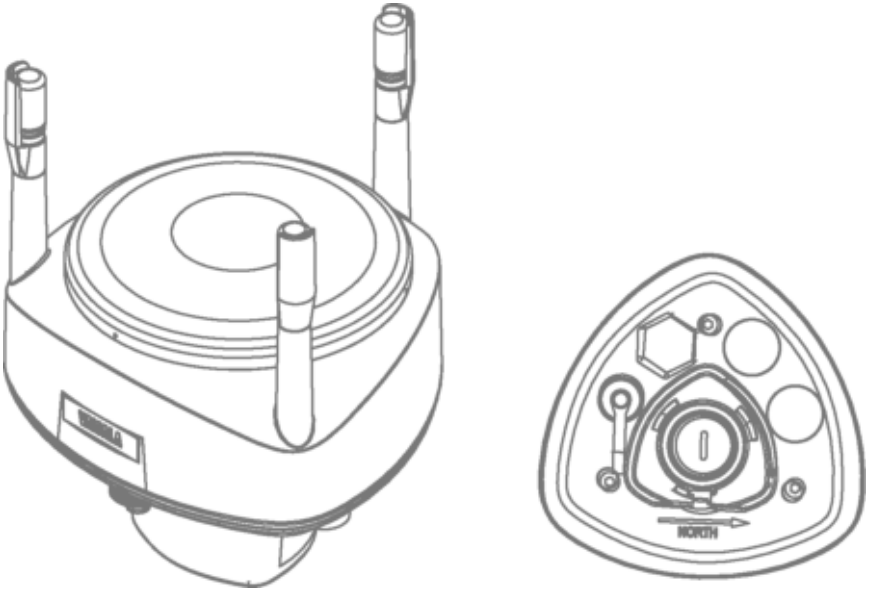

Figure 3 WXT533 and WXT532

2.1.4 WXT531

Table 8 WXT531 measurements

Sensor	Pressure	Temperature	Humidity	Rain	Wind speed	Wind direction
WXT531				✓		

陕西威瑞仪器仪表有限公司 生产代理销售：实验检测设备 气象科学仪器设备
Tel:029-88186182 Web:www.qixiangzhan.cn Email:sxvery@163.com

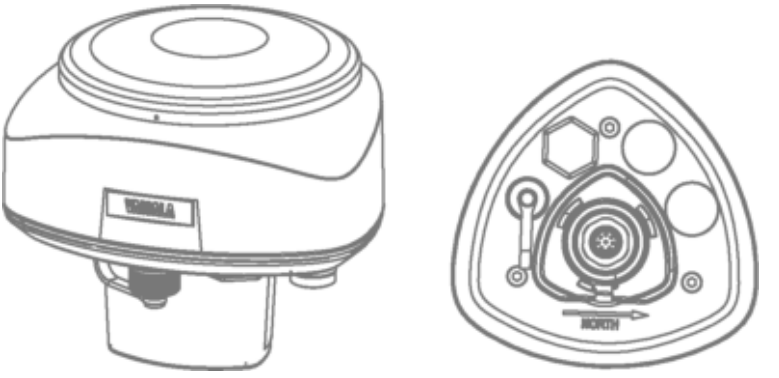

Figure 4 WXT531

2.2 Components

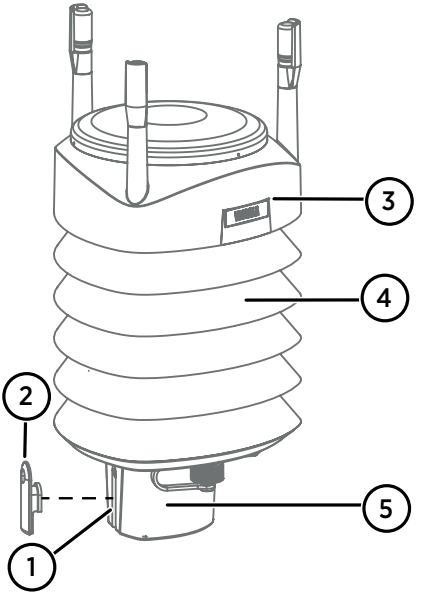

Figure 5 WXT536 components

1 Fixing screw and chassis grounding point
2 Screw cover
3 Top of the transmitter
4 Radiation shield
5 Bottom of the transmitter

陕西威瑞仪器仪表有限公司 生产代理销售：实验检测设备 气象科学仪器设备
Tel:029-88186182 Web:www.qixiangzhan.cn Email:sxvery@163.com

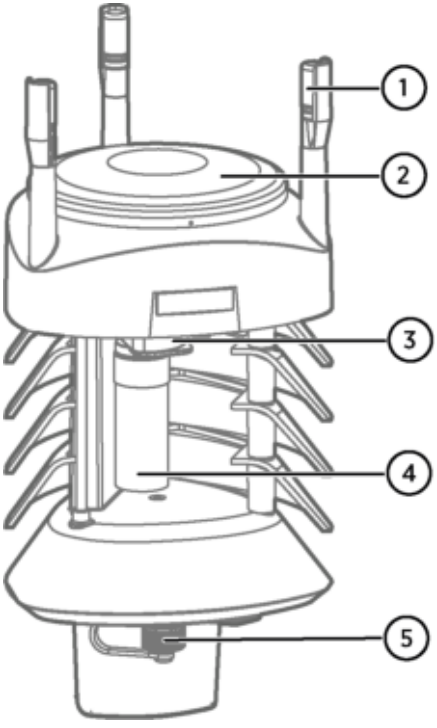

Figure 6 Cut-away view of WXT536

1 Wind transducers (3 pcs)
2 Precipitation sensor
3 Pressure sensor inside the PTU module
4 Humidity and temperature sensors inside the PTU module
5 Service port

陕西威瑞仪器仪表有限公司 生产代理销售：实验检测设备 气象科学仪器设备
Tel:029-88186182 Web:www.qixiangzhan.cn Email:sxvery@163.com

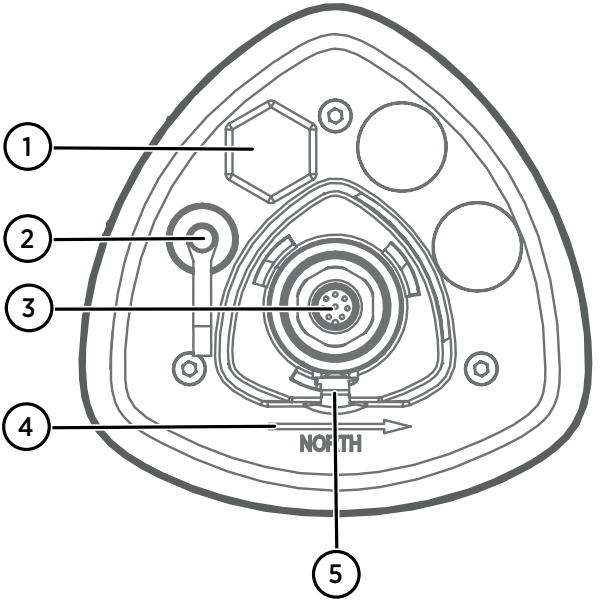

Figure 7 Bottom of WXT536

1 Opening for cable gland (if unused, cover with a hexagonal plug).
Watertight cable gland (optional, included in the bushing and grounding kit)
2 4-pin M8 connector for service port
3 8-pin M12 connector for power or data cable
4 Alignment direction indicator arrow
5 Fixing screw and chassis grounding point

2.3 Optional features

The WXT530 series includes the following optional features:

- USB cables
- Mounting kit
- Bird kit
- Vaisala Configuration Tool
- Heating

These options can be selected when placing the order.

陕西威瑞仪器仪表有限公司 生产代理销售：实验检测设备 气象科学仪器设备
Tel:029-88186182 Web:www.qixiangzhan.cn Email:sxvery@163.com

More information

- Options and accessories (page 166)

2.3.1 USB cables

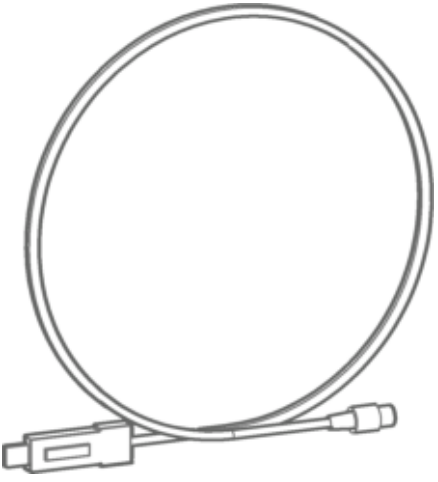

The service cable, while connected between the service port and PC, forces the service port to RS-232 / 19200, 8, N, 1.

You need a driver for the USB cable.

More information

- Installing USB cable driver (page 50)

陕西威瑞仪器仪表有限公司 生产代理销售：实验检测设备 气象科学仪器设备
Tel:029-88186182 Web:www.qixiangzhan.cn Email:sxvery@163.com

2.3.2 Mounting kit

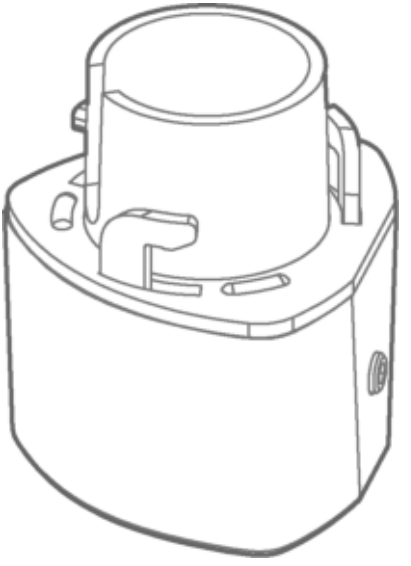

The optional mounting kit (212792) helps mounting the transmitter on a pole mast. If you use the mounting kit, you only need to align the transmitter when mounting for the first time.

With the mounting kit, WXT530 IP rating is IP66. Without the mounting kit, the rating is IP65.

More information

- Mounting WXT530 on vertical pole mast with mounting kit (page 41)

陕西威瑞仪器仪表有限公司 生产代理销售：实验检测设备 气象科学仪器设备
Tel:029-88186182 Web:www.qixiangzhan.cn Email:sxvery@163.com

2.3.3 Surge protector

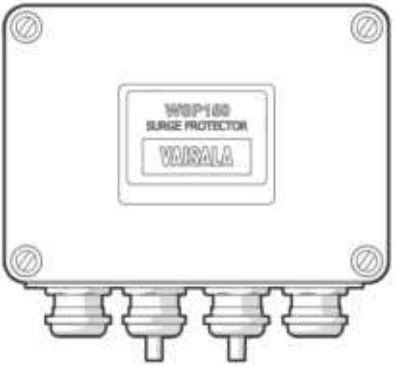

Vaisala recommends using surge protectors:
- When weather instruments are installed in areas with an elevated risk of lightning strike, such as on top of high buildings or masts, or in open areas.
- If your cable length exceeds 10 m.
- If you have unshielded, open-wire lines.

Vaisala provides the following surge protectors:

- Vaisala Surge Protector WSP150.
  A compact transient overvoltage suppressor designed for outdoor use. It can be used with all Vaisala wind and weather instruments. Install WSP150 close to the protected instrument (maximum 3 m).
- Vaisala Surge Protector WSP152.
  Designed for use with Vaisala WXT transmitters and WMT sensors. WSP152 protects the host PC against surges entering through the USB port. Install WSP152 close to the PC, no further than the USB cable can reach (1.4 m).

陕西威瑞仪器仪表有限公司 生产代理销售：实验检测设备 气象科学仪器设备
Tel:029-88186182 Web:www.qixiangzhan.cn Email:sxvery@163.com

2.3.4 Bird kit

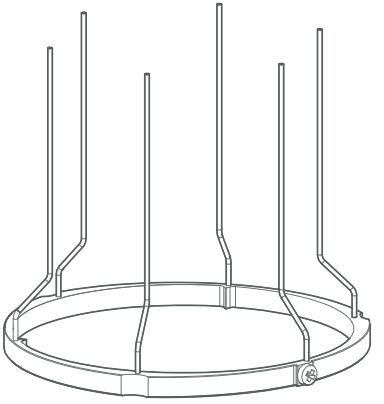

The optional bird kit reduces the interference that birds cause to the wind and rain measurement.

The kit consists of a metallic band with spikes pointing upward. The kit is installed on top of the transmitter. The shape and location of the spikes has been designed so that the interference with wind and rain measurement is minimal.

Figure 8 WXT536 with bird kit

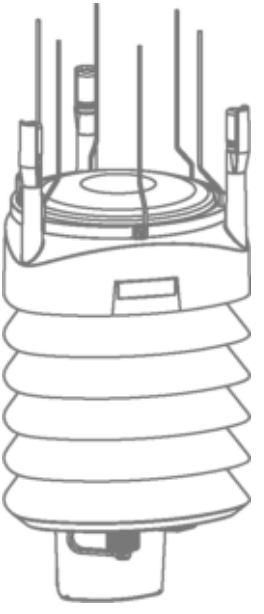

陕西威瑞仪器仪表有限公司 生产代理销售：实验检测设备 气象科学仪器设备
Tel:029-88186182 Web:www.qixiangzhan.cn Email:sxvery@163.com

The spikes do not hurt the birds; they are simply a barrier that makes it difficult for birds to land on top of the transmitter. The bird spike kit does not provide complete protection against birds, but it does render the transmitter unsuitable for roosting and nest building.

When the kit is in place, more snow can accumulate on the transmitter, and the snow can melt away more slowly.

2.3.5 Vaisala Configuration Tool

Vaisala Configuration Tool is a Windows-based, user-friendly parameter setting software for WXT530 transmitters. It is also fully compatible with WMT52 and WXT520.

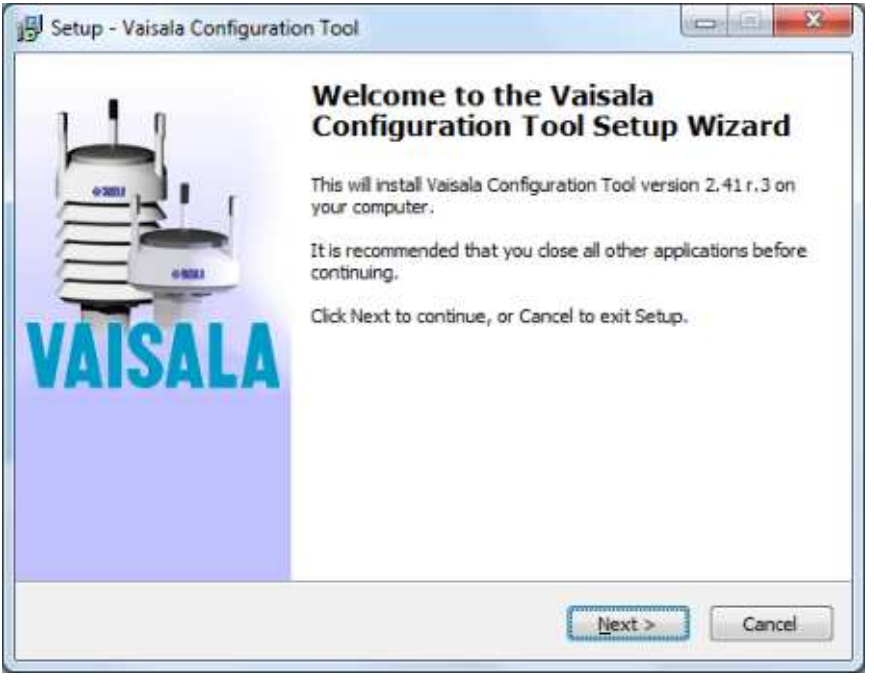

Figure 9 Vaisala Configuration Tool

2.3.6 Sensor heating

Heating helps to improve the measurement accuracy.

More information

- Heating (page 33)

陕西威瑞仪器仪表有限公司 生产代理销售：实验检测设备 气象科学仪器设备
Tel:029-88186182 Web:www.qixiangzhan.cn Email:sxvery@163.com

2.4 Backward compatibility

Always use the latest version of Vaisala Configuration Tool.

The WXT530 series transmitters are fully compatible with WXT520 and WMT52. This applies to mounting, cable options, and communication.

When you upgrade from WMT52 to WXT532 or from WXT520 to WXT536, you must use the same profile and communication option as you had before. Regenerate the setup files (WXC files) for WXT530 with the latest version of Vaisala Configuration Tool .

Because the WXT530 series has several product variants, the old configuration code does not apply to the new WXT530 sensor. You must generate and apply a new order code for it.

More information

- Vaisala Configuration Tool (page 27)

2.5 ESD protection

Electrostatic discharge (ESD) can damage electronic circuits. Vaisala products are adequately protected against ESD for their intended use. However, it is possible to damage the product by delivering electrostatic discharges when touching, removing, or inserting any objects in the equipment housing.

To avoid delivering high static voltages to the product:

- Handle ESD-sensitive components on a properly grounded and protected ESD workbench or by grounding yourself to the equipment chassis with a wrist strap and a resistive connection cord.
- If you are unable to take either precaution, touch a conductive part of the equipment chassis with your other hand before touching ESD-sensitive components.
- Hold component boards by the edges and avoid touching component contacts.

2.6 FCC Part 15 compliance statement

This equipment has been tested and found to comply with the limits for a Class B digital device, pursuant to Part 15 of the FCC rules. These limits are designed to provide reasonable protection against harmful interference in a residential installation. This equipment generates, uses and can radiate radio frequency energy and, if not installed and used in accordance with the instructions, may cause harmful interference to radio communications. However, there is no guarantee that the interference will not occur in a particular installation. If this equipment does cause harmful interference to radio or television reception, which can be determined by turning the equipment off and on, the user is encouraged to try to correct the interference by one or more of the following measures:

- Reorient or relocate the receiving antenna.

陕西威瑞仪器仪表有限公司 生产代理销售：实验检测设备 气象科学仪器设备
Tel:029-88186182 Web:www.qixiangzhan.cn Email:sxvery@163.com

- Increase the separation between the equipment and receiver.
- Connect the equipment into an outlet on a circuit different from that to which the receiver is connected.
- Consult the dealer or an experienced radio/TV technician for help.

CAUTION! This unit was tested with shielded cables on the peripheral devices. Shielded cables must be used with the unit to ensure compliance.

CAUTION! Changes or modifications to this equipment not expressly approved by the party responsible for compliance could void the user's authority to operate the equipment.

This device complies with part 15 of the FCC Rules. Operation is subject to the following two conditions: (1) This device may not cause harmful interference, and (2) this device must accept any interference received, including interference that may cause undesired operation.

陕西威瑞仪器仪表有限公司 生产代理销售：实验检测设备 气象科学仪器设备
Tel:029-88186182 Web:www.qixiangzhan.cn Email:sxvery@163.com

3. Functional description

3.1 Wind measurement principle

WXT536	WXT535	WXT534	WXT533	WXT532	WXT531
✔			✔	✔	

The transmitters use Vaisala WINDCAP sensor technology for wind measurement.

The wind sensor has an array of 3 equally spaced ultrasonic transducers on a horizontal plane. The unit determines wind speed and wind directions by measuring the time it takes the ultrasound to travel from one transducer to the other two.

The wind sensor measures the transit time (in both directions) along the 3 paths established by the array of transducers. The transit time depends on the wind speed along the ultrasonic path. For zero wind speed, both the forward and reverse transit times are the same. With wind along the sound path, the up-wind direction transit time increases and the down-wind transit time decreases.

The unit calculates wind speed from the measured transit times using the following formula:

$$V_w = 0.5 \times L \times \left(1/t_f - 1/t_r\right)$$

V_w	Wind speed
L	Distance between the two transducers
t_f	Transit time in forward direction
t_r	Transit time in reverse direction

Measuring the 6 transit times allows V_w to be computed for each of the 3 ultrasonic paths. The computed wind speeds are independent of altitude, temperature, and humidity, which are cancelled out when the transit times are measured in both directions, although the individual transit times depend on these parameters.

The V_w values of 2 array paths are enough to compute wind speed and wind direction. A signal processing technique ensures that wind speed and wind direction are calculated from the 2 array paths with the best quality.

The wind speed is represented as a scalar speed in selected units (m/s, kt, mph, km/h). The wind direction from which the wind comes is expressed in degrees (°). North is represented as 0°, East as 90°, South as 180°, and West as 270°.

The wind direction is not calculated when the wind speed drops below 0.05 m/s. In this case, the last calculated direction output remains until the wind speed increases to the level of 0.05 m/s.

陕西威瑞仪器仪表有限公司 生产代理销售：实验检测设备 气象科学仪器设备
Tel:029-88186182 Web:www.qixiangzhan.cn Email:sxvery@163.com

The average values of wind speed and direction are calculated as a scalar average of all samples over the selected averaging time (1 ... 3600 s) with a selectable updating interval. The sample count depends on the selected sampling rate: 4 Hz (default), 2 Hz, or 1 Hz. The minimum and maximum values of wind speed and direction represent the corresponding extremes during the selected averaging time.

You can select the computation of the wind speed extreme values in one of 2 ways:

- Traditional minimum/maximum calculation.
- 3-second gust & calm calculation recommended by the World Meteorological Organization (WMO). In this case the highest and lowest 3-second average values (updated once a second) replace the maximum and minimum values in reporting of wind speed, while the wind direction variance is returned in the traditional way.

The transmitter constantly monitors the wind measurement signal quality. If poor quality is detected, the wind values are marked as invalid. If over half of the measurement values are considered invalid, the last valid wind values are returned as missing data. In the SDI-12 protocol, the invalid values are marked as zero.

More information

‣ Wind measurement averaging method (page 200)

3.2 Precipitation measurement principle

WXT536	WXT535	WXT534	WXT533	WXT532	WXT531
✔	✔		✔		✔

The transmitter uses Vaisala RAINCAP Sensor 2 technology in precipitation measurement.

The precipitation sensor comprises of a steel cover and a piezoelectrical sensor mounted on the bottom surface of the cover.

The precipitation sensor detects the impact of individual raindrops. The signals from the impact are proportional to the volume of the drops. The signal of each drop can be converted directly to accumulated rainfall. An advanced noise filtering technique filters out signals originating from other sources than raindrops.

The measured parameters are:

- Accumulated rainfall
- Rain current and peak intensity
- Duration of a rain event

Detecting each drop enables the computing of rain amount and intensity with high resolution.

陕西威瑞仪器仪表有限公司 生产代理销售：实验检测设备 气象科学仪器设备
Tel:029-88186182 Web:www.qixiangzhan.cn Email:sxvery@163.com

Precipitation current intensity is internally updated every 10 seconds and represents the intensity during the 1-minute period before requesting/automatic precipitation message sending (for fast reactions to a rain event, during the first minute of the rain event, the intensity is calculated over the period rain has lasted in 10-second steps instead of a fixed period of 1 minute). Precipitation peak intensity represents the maximum of the calculated current intensity values since last precipitation intensity reset.

The sensor can also distinguish hail stones from raindrops. The measured hail parameters are the cumulative number of hail stones, current and peak hail intensity and the duration of a hail shower.

The precipitation sensor operates in 4 modes.

Table 9 Precipitation sensor modes

Mode	Description
Precipitation start/end mode	The transmitter automatically sends a precipitation message 10 seconds after the recognition of the first drop. The messages are sent continuously and they stop when the precipitation ends.
Tipping bucket mode	The mode emulates tipping bucket type precipitation sensors. The transmitter sends automatically a precipitation message when the counter detects 1 unit increment (0.1 mm/0.01 in).
Time mode	The transmitter sends automatically a precipitation message in the update intervals defined by the user.
Polled mode	The transmitter sends a precipitation message when requested by the user.

More information

- Precipitation sensor (page 125)

3.3 PTU measurement principle

WXT536	WXT535	WXT534	WXT533	WXT532	WXT531
✔	✔	✔			

The PTU module contains separate sensors for pressure, temperature, and humidity measurement.

The PTU module includes:

- Capacitive silicon BAROCAP sensor for pressure measurement
- Resistive thin-film Pt1000 sensor for air temperature measurement
- Capacitive thin-film polymer HUMICAP R2 sensor for humidity measurement

陕西威瑞仪器仪表有限公司 生产代理销售：实验检测设备 气象科学仪器设备
Tel:029-88186182 Web:www.qixiangzhan.cn Email:sxvery@163.com

In case of capacitive sensors, the measurement principle of the transmitter is based on an advanced RC oscillator and reference capacitors against which the capacitance of a sensor is continuously measured. The resistive Pt1000 sensors are measured with a voltage divider circuit incorporating a reference resistor and a stable voltage source. Using mathematical sensor response models and the information from sensor calibrations, the microprocessor of the transmitter performs transformations from measured electrical parameters to reported environmental parameters. These calculations include compensation for the temperature dependency of the pressure and humidity sensors.

3.4 Heating

WXT536	WXT535	WXT534	WXT533	WXT532	WXT531
✔	✔		✔	✔	✔

When operating the sensor in temperatures below 0 °C (32 °F), select a model with an internal heater and enable the heater for operation.

The heating elements located below the precipitation sensor and inside the wind transducers help keeping the sensors clean from snow and ice. A heating temperature (**Th**) sensor underneath the precipitation sensor controls the heating. Note that **Th** is measured inside the equipment, where temperature is much higher than the ambient temperature (**Ta**).

The heating control tries to keep **Th** at +15 °C by adjusting the heating power. The heater control switches heating resistors on and off based on heating voltage and **Th**.

Table 10 Heater resistance

Transmitter model	Heater resistance when Vh < 15 V	Heater resistance when Vh > 15 V
WXT536, WXT535, WXT533, WXT532	15	57
WXT531	27	

The instant current depends on the heater voltage. You must select the power supply with the instant current in mind. The average heating power and heater performance do not depend on the heating voltage.

When the heating function is disabled, the heating is off in all conditions.

Snow accumulation can cause temporary wind measurement problems even when heating is enabled.

陕西威瑞仪器仪表有限公司 生产代理销售：实验检测设备 气象科学仪器设备
Tel:029-88186182 Web:www.qixiangzhan.cn Email:sxvery@163.com

More information

- Supervisor message (page 131)

3.5 Analog input interface

WXT536	WXT535	WXT534	WXT533	WXT532	WXT531
✔					

WXT536 offers an analog input option for solar radiation, external temperature, level measurement, and tipping bucket.

Tipping bucket and level sensor are not supported by the Modbus protocol.

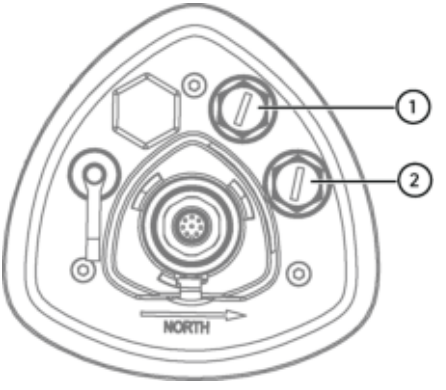

Figure 10 Analog inputs for external sensors

1 Analog input 1
Sensor A: Solar radiation
2 Analog input 2
Sensor B: Temperature
Sensor C: Level sensor
Sensor D: Tipping bucket

3.6 Analog output interface

WXT536	WXT535	WXT534	WXT533	WXT532	WXT531
				✔	

WXT532 offers an analog output option for wind speed and wind direction measurement.

The output settings are preconfigured at the factory according to your order. WXT532 takes measurements according to the configured averaging time and synthesizes the analog outputs of wind speed and wind direction with an update interval of 0.25 seconds.

陕西威瑞仪器仪表有限公司 生产代理销售：实验检测设备 气象科学仪器设备
Tel:029-88186182 Web:www.qixiangzhan.cn Email:sxvery@163.com

4. Installation

CAUTION! Do not store the transmitter outdoors. Make sure you switch on the transmitter right after installation.

4.1 Installing WXT530

At the measurement site, you must mount, ground, align, and connect the transmitter to the data logger and the power source.

You can install the instrument on top of a pole mast or on a support arm.

For the most reliable measurements:

- Avoid trees or other objects nearby which could disturb wind flow.
- Install the sensor to the height that best represents the prevailing wind conditions on site.

CAUTION! To prevent equipment damage, install an air terminal so that the tip is as high above the instruments and sensors as possible.

To prevent corrosion, oxidation, and seizing, use a non-conductive, non-water-soluble, non-silicone-based grease, such as ceramic or Teflon paste, between different kinds of metal.

4.1.1 Maritime installations

In maritime installations according to IEC 60945, the WXT530 series belongs to the installation category C, which means that it is exposed to weather.

When making maritime installations, note the following:

- Do not install WXT530 near a magnetic compass. The compass safe distance is 5 m (16 ft 5 in). The transmitter must be installed in open space to avoid disturbance in measurements.
- Do not place WXT530 directly in front of a radar.
- Do not install WXT530 next to a powerful RF-transmitter antenna.

4.2 Placing WXT530

Select a site that represents the general area of interest to ensure representative ambient measurements. Make sure that the site that is free from turbulence caused by nearby objects, such as trees and buildings.

陕西威瑞仪器仪表有限公司 生产代理销售：实验检测设备 气象科学仪器设备
Tel:029-88186182 Web:www.qixiangzhan.cn Email:sxvery@163.com

WARNING! To protect personnel and the transmitter, install an air terminal with the tip at least one meter above the transmitter. It must be properly grounded, compliant with all applicable local safety regulations.

CAUTION! Installations on top of high buildings or masts and in sites on open grounds are vulnerable to lightning strikes. A nearby lightning strike can induce a high-voltage surge not tolerable by the internal surge suppressors of the instrument.
Additional protection is needed in regions with frequent, severe thunderstorms, especially when long line cables (> 30 m / 98 ft) are used. Vaisala recommends using a surge protector, such as WSP150 and WSP152, in all sites with an elevated risk of lightning strike.

陕西威瑞仪器仪表有限公司 生产代理销售：实验检测设备 气象科学仪器设备
Tel:029-88186182 Web:www.qixiangzhan.cn Email:sxvery@163.com

4.3 Unpacking WXT530

The transmitter comes in a custom protective package. The following figure shows the contents of the package.

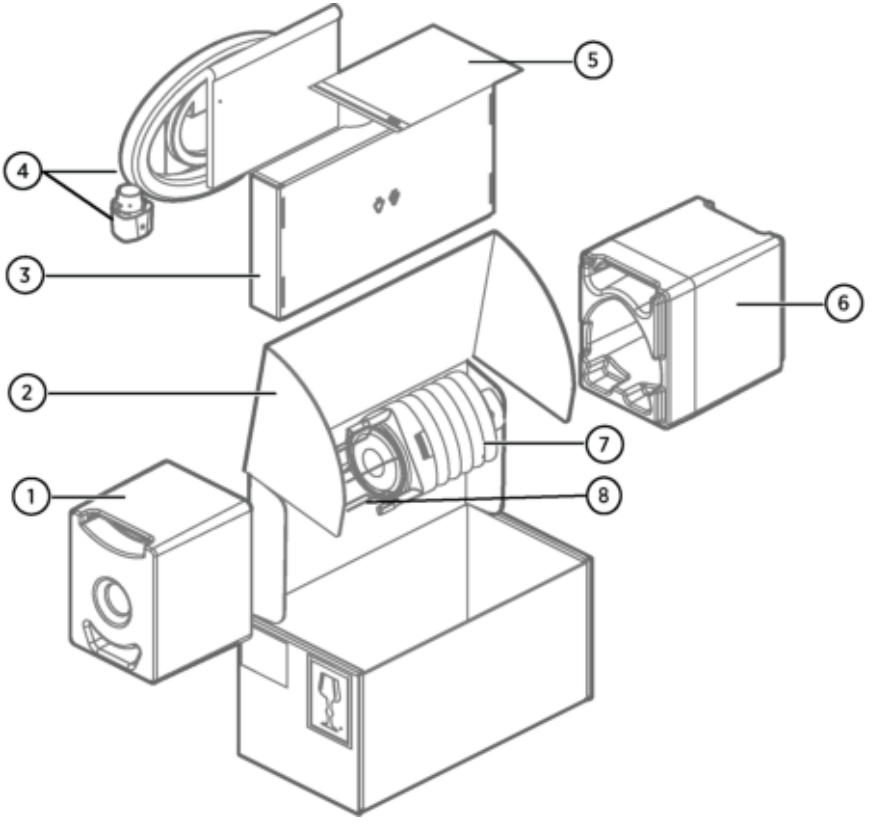

Figure 11 Package contents

1 Protective packaging top
2 Shipping carton
3 Inner box
4 Manual, cables, mounting kit (optional)
5 Installation note
6 Protective packaging bottom
7 Transmitter
8 Bird kit (optional)

陕西威瑞仪器仪表有限公司 生产代理销售：实验检测设备 气象科学仪器设备
Tel:029-88186182 Web:www.qixiangzhan.cn Email:sxvery@163.com

CAUTION! Be careful not to damage the wind transducers located at the top of the 3 antennas. Dropping the device can break or damage the transducers. If the antenna bends or twists, re-aligning can be difficult or impossible.



CAUTION! Do not remove the top of the package protecting the transducer until you have installed the transmitter. The polypropylene cushion protects the transducers during installation.

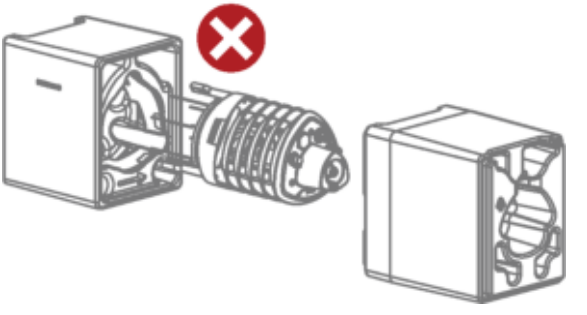

Save the container and the packaging materials for future transportation and shipping.

陕西威瑞仪器仪表有限公司 生产代理销售：实验检测设备 气象科学仪器设备
Tel:029-88186182 Web:www.qixiangzhan.cn Email:sxvery@163.com

4.4 Mounting WXT530

The transmitter is easy to install as it does not have any moving parts. The transmitter can be mounted on:

- Vertical pole mast
- Support arm

Install the transmitter upright.

The transmitter radiation shield reflects light. If you install the transmitter next to a pyranometer, the pyranometer can give incorrect measurements. Install the transmitter on the same level with the pyranometer so that the distance between the units is approximately 80 cm (31.5 in).

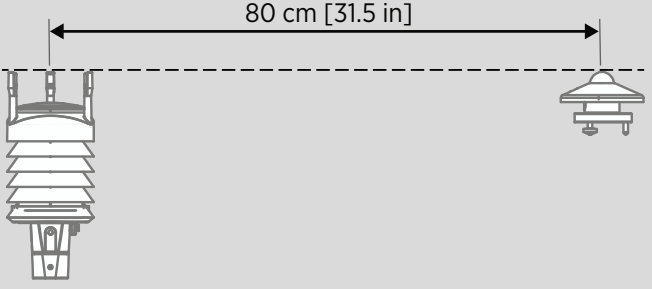

More information

- Mounting WXT530 on vertical pole mast without mounting kit (page 39)
- Mounting WXT530 on vertical pole mast with mounting kit (page 41)
- Mounting WXT530 on sensor support arm (page 43)

4.4.1 Mounting WXT530 on vertical pole mast without mounting kit

2.5-mm Allen key

陕西威瑞仪器仪表有限公司 生产代理销售：实验检测设备 气象科学仪器设备
Tel:029-88186182 Web:www.qixiangzhan.cn Email:sxvery@163.com

1. Remove the screw cover and insert the transmitter to the pole mast.

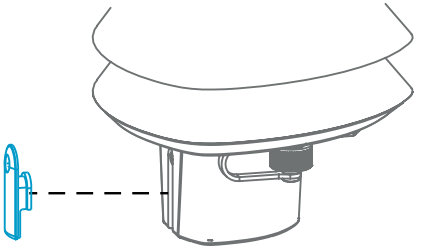

2. Align the transmitter so that the arrow points to North.

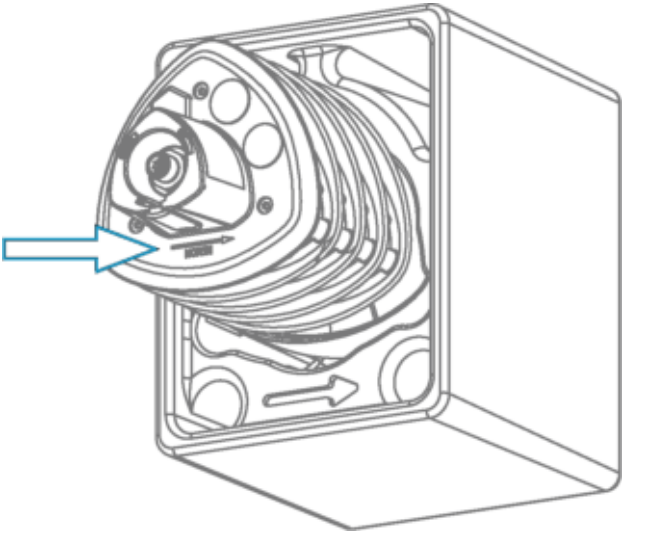

3. Tighten the fixing screw and replace the screw cover.
4. Connect the sensor cable.

陕西威瑞仪器仪表有限公司 生产代理销售：实验检测设备 气象科学仪器设备
Tel:029-88186182 Web:www.qixiangzhan.cn Email:sxvery@163.com

4.4.2 Mounting WXT530 on vertical pole mast with mounting kit

2.5-mm and 5-mm Allen keys

CAUTION! Handle with care. Any impact on the instrument or sensor array may cause damage and lead to incorrect measurements.

When mounting a transmitter on a pole mast, you can use an optional mounting kit to ease mounting.

1. Remove the adapter sleeve from the mounting kit.
2. Lead the sensor cable through the mounting kit, and connect the cable to the bottom part of the sensor.
3. Insert the mounting kit adapter to the transmitter bottom.

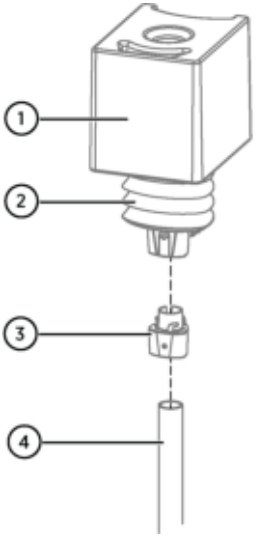

1 Protective cushion
2 Transmitter
3 Mounting kit
4 Pole

4. Turn the kit firmly until you feel the adapter snap into the locked position.

陕西威瑞仪器仪表有限公司 生产代理销售：实验检测设备 气象科学仪器设备
Tel:029-88186182 Web:www.qixiangzhan.cn Email:sxvery@163.com

5. Holding the sensor from its body, run the sensor cable through the mounting adapter, and slide the sensor onto the adapter. Do not tighten the fixing screw yet.

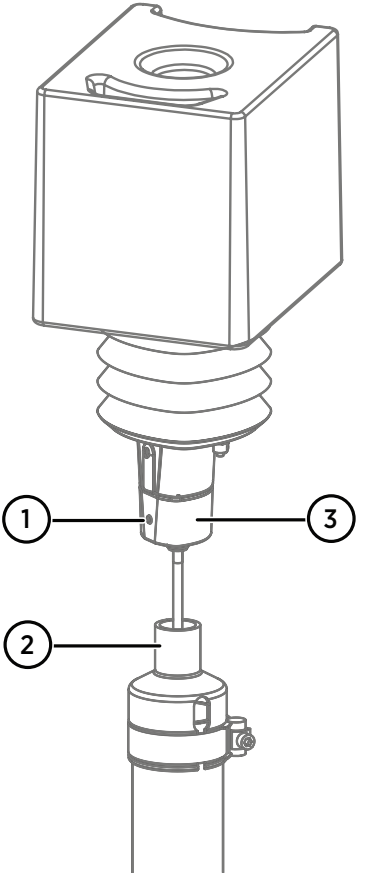

1 Fixing screw
2 Mounting accessory between mounting kit and 60 mm tube (WMSFIX60)
3 Mounting kit (212792)

6. Align the transmitter so that the arrow on the bottom of the transmitter points North.
7. To attach the adapter to the pole mast, tighten the fixing screw of the mounting adapter.

陕西威瑞仪器仪表有限公司 生产代理销售：实验检测设备 气象科学仪器设备
Tel:029-88186182 Web:www.qixiangzhan.cn Email:sxvery@163.com

8. Remove the protective cushion.

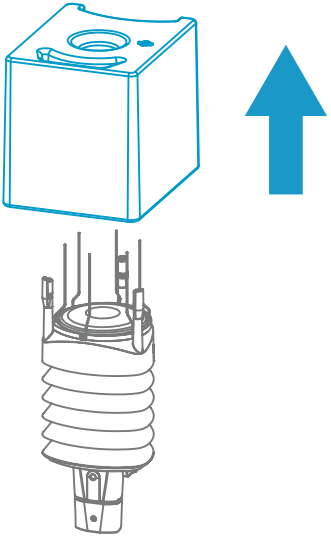

When removing a transmitter from the pole, turn the transmitter so that it snaps out from the mounting kit. Realignment is not needed when replacing the device.

4.4.3 Mounting WXT530 on sensor support arm

10-mm wrench

If you use the optional mounting kit, you only need to align the sensor when mounting it for the first time.

CAUTION! Handle with care. Any impact on the instrument or sensor array may cause damage and lead to incorrect measurements.

1. Remove the screw cover.
2. Align the sensor support arm in South–North direction.

   If you cannot align the sensor support arm, adjust the wind direction offset.

陕西威瑞仪器仪表有限公司 生产代理销售：实验检测设备 气象科学仪器设备
Tel:029-88186182 Web:www.qixiangzhan.cn Email:sxvery@163.com

3. Mount the transmitter on the sensor support arm.

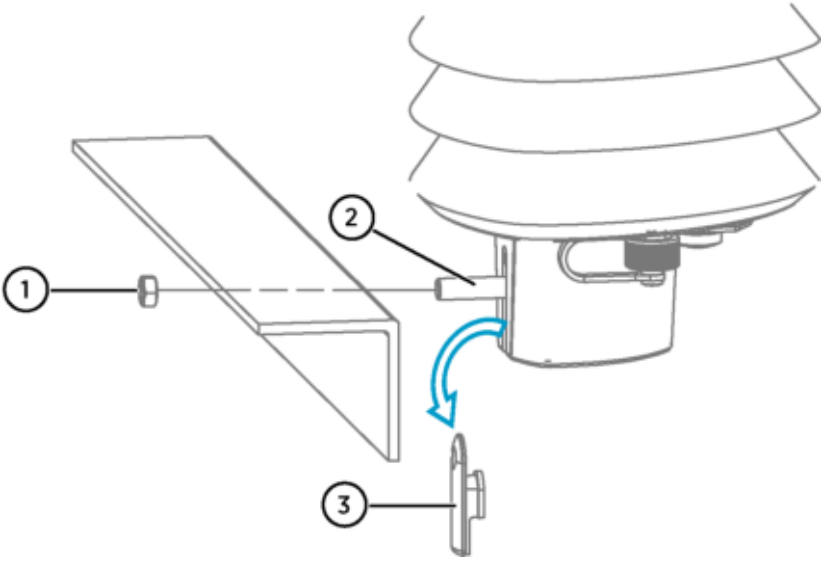

1 Nut M6 DIN 934
2 Mounting bolt M6 DIN 933
3 Screw cover

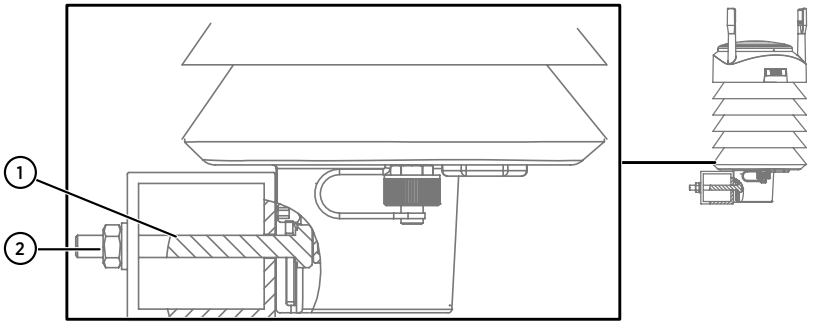

1 Mounting bolt M6 DIN 933
2 Nut M6 DIN 934

陕西威瑞仪器仪表有限公司 生产代理销售：实验检测设备 气象科学仪器设备
Tel:029-88186182 Web:www.qixiangzhan.cn Email:sxvery@163.com

4.5 Grounding

A transmitter is typically grounded by installing it on a mast or a cross arm that provides a good connection to earth ground.

As grounding is provided through the fixing screw (or mounting bolt), it is important that it makes a good ground connection.

4.5.1 Grounding with bushing and grounding kit

If the surface of the mounting point is painted or has some other finishing that prevents a good electrical connection, consider using the bushing and grounding kit (222109) and a cable to ensure ground connection.

Use the bushing and grounding kit to run a cable from the fixing screw to a grounding point. The kit does not include a grounding cable. The minimum grounding conductor size is 4 mm^2 (11 AWG).

1. Assemble the grounding kit so that the connector for the grounding cable is between the washers and nuts.

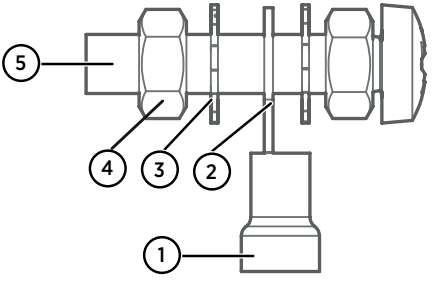

1 Connector for grounding cable
2 Abiko connector
3 Washer (2 pcs)
4 Nut (2 pcs)
5 Fixing screw

2. Connect a grounding cable to the connector. Use a 6 mm^2 (9 AWG) conductor to achieve a good ground connection.
3. Remove the transmitter fixing screw.

陕西威瑞仪器仪表有限公司 生产代理销售：实验检测设备 气象科学仪器设备
Tel:029-88186182 Web:www.qixiangzhan.cn Email:sxvery@163.com

4. Insert the grounding kit through the hole in the seal. Make sure that the nuts are tight so that the connector has a good connection.

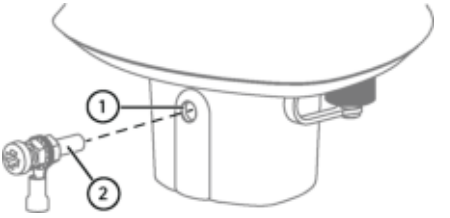

1 Seal
2 Fixing screw

5. Connect the other end of the cable to a good grounding point.

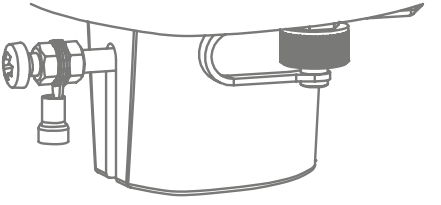

4.6 Aligning WXT530

WXT536	WXT535	WXT534	WXT533	WXT532	WXT531
✔			✔	✔	

To help the alignment, there is an arrow and the text **North** on the bottom of the transmitter. Align the transmitter so that the arrow points North.

陕西威瑞仪器仪表有限公司 生产代理销售：实验检测设备 气象科学仪器设备
Tel:029-88186182 Web:www.qixiangzhan.cn Email:sxvery@163.com

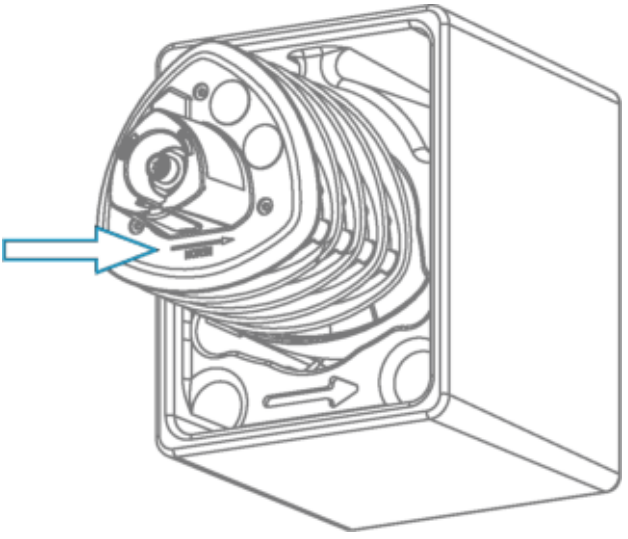

Figure 12 WXT530 North arrow

Wind direction can be referred either to true North, which uses the Earth's geographic meridians, or to the magnetic North, which is read with a magnetic compass. The magnetic declination is the difference in degrees between the true North and magnetic North. The source for the magnetic declination should be current as the declination changes over time.

陕西威瑞仪器仪表有限公司 生产代理销售：实验检测设备 气象科学仪器设备
Tel:029-88186182 Web:www.qixiangzhan.cn Email:sxvery@163.com

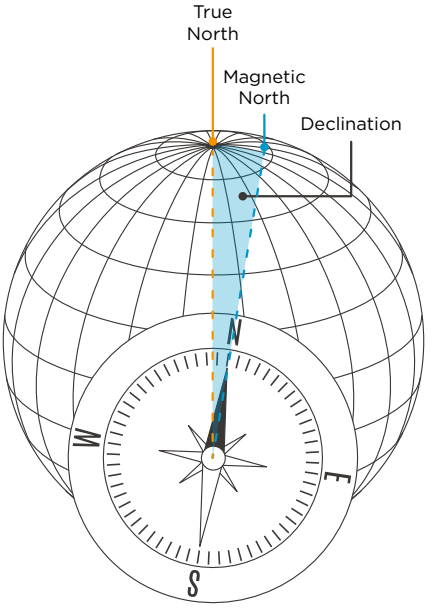

Figure 13 Magnetic declination

4.6.1 Aligning WXT530 with compass

- 2.5-mm Allen key
- Compass

Do not remove the instrument or sensor from the mounting kit during alignment.

1. If the transmitter is mounted, loosen the fixing screw on the bottom of the transmitter so that you can rotate it.
2. Use a compass to determine that the transducer heads of the transmitter are exactly in line with the compass and that the arrow on the bottom of the transmitter points North.
3. Tighten the fixing screw. Tightening torque 1.5 Nm.

4.6.2 Configuring wind direction offset

If the transmitter cannot be aligned so that the arrow on the bottom points North, make a wind direction offset by configuring the deviation angle in the transmitter.

陕西威瑞仪器仪表有限公司 生产代理销售：实验检测设备 气象科学仪器设备
Tel:029-88186182 Web:www.qixiangzhan.cn Email:sxvery@163.com

1. Mount the transmitter to a desired position.
2. Define the deviation angle from the North (zero) alignment. Use the ± sign indication to express the direction from the North line.

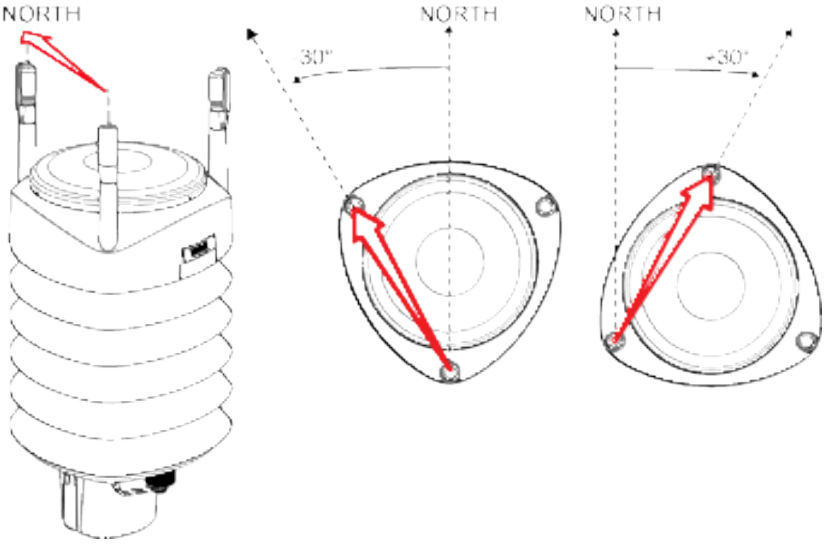

3. Enter the deviation angle in the device using the wind message formatting command **aWU,D** (direction offset).

Now the transmitter transmits the wind direction data using the changed zero alignment.

More information

- Mounting WXT530 (page 39)
- Mounting WXT530 on sensor support arm (page 43)

4.7 Installing Vaisala Configuration Tool

1. Insert the WXT530 driver memory stick in the USB port.
2. Go to the *WXT_Series_Conf_Tool* folder and run *WXTConf-2.41 r.3Setup.exe*.
3. When Vaisala Configuration Tool Setup Wizard opens, select **Next**.

陕西威瑞仪器仪表有限公司 生产代理销售：实验检测设备 气象科学仪器设备
Tel:029-88186182 Web:www.qixiangzhan.cn Email:sxvery@163.com

4. In the **User Information** window, fill in the **User Name**, **Organization**, and **License Key** fields. The license key is shown on the sticker on the memory stick. Select **Next**.

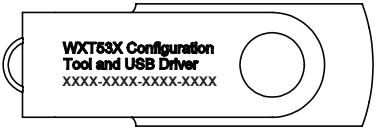

5. In the **Select Destination Location** window, select a folder and select **Next**.
6. In the **Select Start Menu Folder** window, select a folder for shortcuts and select **Next**.
7. In the **Select Additional Tasks** window, select **Additional Tasks** and select **Next**.
8. In the **Ready to Install** window, select **Install**. **Installing** window opens.
9. Select **Launch Vaisala Configuration Tool** and select **Finish** to launch the tool.

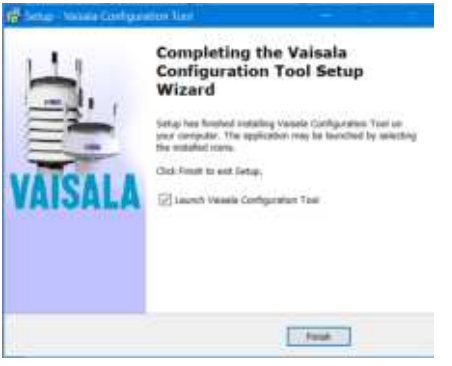

More information

- Backward compatibility (page 28)

4.8 Installing USB cable driver

Before taking the USB cable into use, you must install the USB cable driver on your PC. The driver is compatible with Windows 7, Windows 8, and Windows 10.

1. Make sure that the USB cable is not connected.
2. Insert the WXT530 driver memory stick in the USB port.

陕西威瑞仪器仪表有限公司 生产代理销售：实验检测设备 气象科学仪器设备
Tel:029-88186182 Web:www.qixiangzhan.cn Email:sxvery@163.com

3. Go to the **USB-driver** folder and start installation by running `setup.exe`.

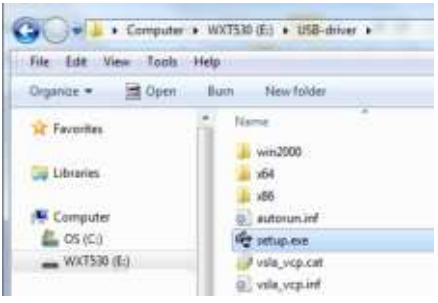

4. When Vaisala USB Device Driver Setup Wizard opens, select **Next**.
5. In the **Select Additional Tasks** window, select the tasks you want to perform and select **Install**.
6. Select **Display Vaisala USB Device Finder > Finish**. The driver starts.



   Newer Windows versions might require checking the driver status by opening Windows Device Manager. It should have **Vaisala USB Device** listed under **Ports (COM & LPT)**.

7. Connect the cable.

Remember to use the correct port in the settings of your terminal program. Windows recognizes each individual cable as a different device, and reserves a new COM port.

陕西威瑞仪器仪表有限公司 生产代理销售：实验检测设备 气象科学仪器设备
Tel:029-88186182 Web:www.qixiangzhan.cn Email:sxvery@163.com

There is no reason to uninstall the driver for normal use. However, if you wish to remove the driver files and all Vaisala USB cable devices, uninstall the entry for Vaisala USB Instrument Driver from the program manager tool in the Windows Control Panel.

陕西威瑞仪器仪表有限公司 生产代理销售：实验检测设备 气象科学仪器设备
Tel:029-88186182 Web:www.qixiangzhan.cn Email:sxvery@163.com

5. Power management

This chapter describes how to connect the power supply and the serial interfaces and how to manage and estimate power consumption.

You can access the transmitter through the following serial interfaces:

- RS-232
- RS-485
- RS-422
- SDI-12
- mA output (WXT532)

You can wire them either through the internal screw terminal or the 8-pin M12 connector. You can use only one serial interface at a time.

CAUTION! The cable opening in the transmitter bottom assembly is covered with hexagonal rubber plugs. If you are not using the cable gland (included in the bushing and grounding kit), keep the opening covered.

More information

‣ Wiring SDI-12 (page 168)

5.1 Power supplies

WXT530 and the cable must be protected with a fuse or a circuit breaker from the supply side. A fuse or a circuit breaker protects the cable from overheating if there is a short circuit in the cabling.
The maximum size of the fuse or circuit breaker is 2 A. 1.6 A is also enough for guaranteed operation. Overcurrent limitation or protection can also be built into the power supply. This limitation applies to Vaisala cables with 0.25 mm^2 conductors. The minimum conductor cross section area is 0.25 mm^2 for WXT530 series instrument with heating.

The minimum consumption graph is for SDI-12 standby mode.

陕西威瑞仪器仪表有限公司 生产代理销售：实验检测设备 气象科学仪器设备
Tel:029-88186182 Web:www.qixiangzhan.cn Email:sxvery@163.com

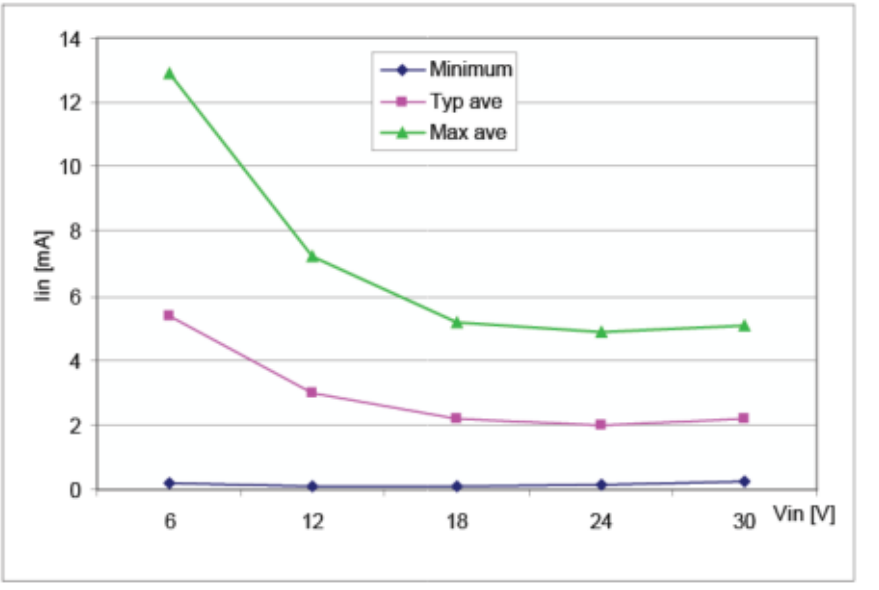

Figure 14 Average operational current consumption (with 4 Hz wind sensor sampling)

The input power supply must be capable of delivering 60 mA (at 12 V) or 100 mA (at 6 V) instant current spikes with duration of 30 ms. These are drawn by the wind sensor (whenever enabled) at 4 Hz rate, which is the default value for wind sampling. Wind sampling at 2 Hz and 1 Hz rate is also available.

Because wind measurement is the most consuming operation in the system, the average current consumption decreases almost in proportion to the sampling rate.

Typically, the average consumption is less than 10 mA. The higher the voltage, the lower the current.

Heating voltage Vh+ (one of the following two alternatives):

- 12 ... 24 V DC (–10 % ... + 30 %)
- 12 ... 17 V AC_{rms} (–10 % ... +30 %)

The typical DC voltage ranges are:

- 12 V DC ± 20 % (max 1.1 A)
- 24 V DC ± 20 % (max 0.6 A)

Nominally at 15.7 V heating voltage level, the transmitters automatically change the heating element combination to reduce instant current. The input resistance (R_{in}) is radically increased with voltages above 16 V as shown in the following graph. The average (5s) power does not depend on the input voltage.

The recommended range for AC is:

陕西威瑞仪器仪表有限公司 生产代理销售：实验检测设备 气象科学仪器设备
Tel:029-88186182 Web:www.qixiangzhan.cn Email:sxvery@163.com

- 12 ... 17 V AC_{rms} (–10 % ... +30 %) max 1.1 A for AC

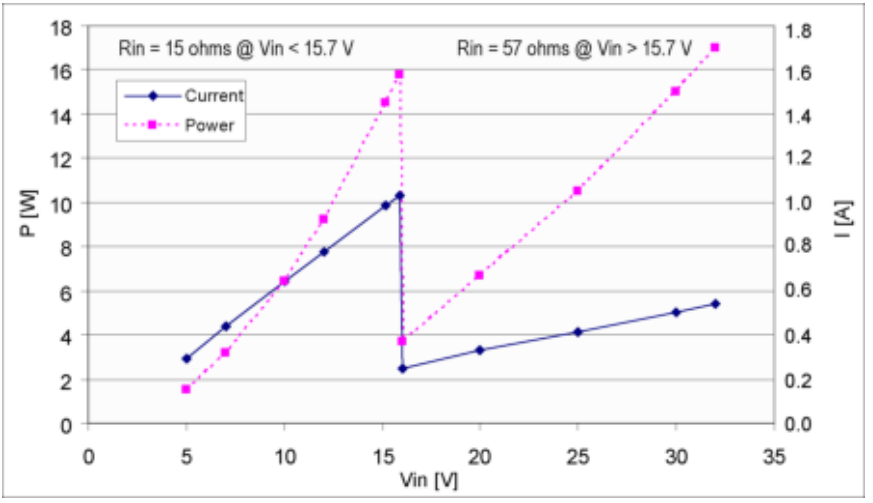

Figure 15 Heating instant current and power vs Vh (WXT536, WXT535, WXT533, and WXT532)

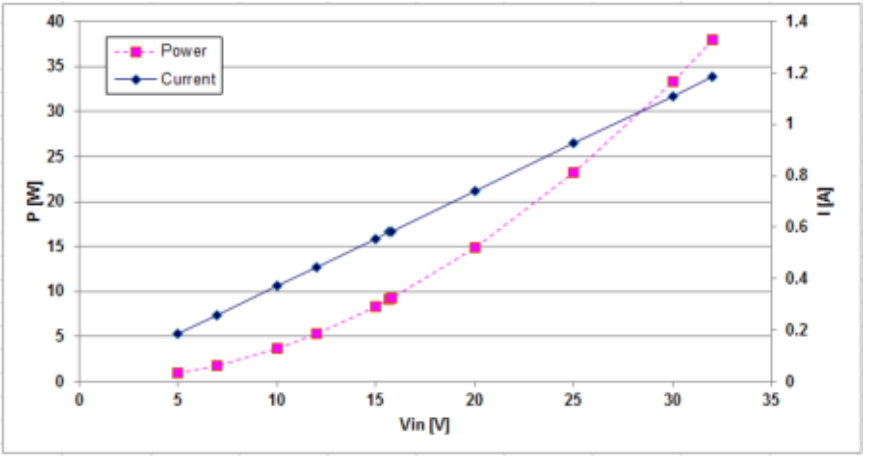

Figure 16 Heating instant current and power vs Vh (WXT531)

The power supply must meet the values shown in the previous tables.

陕西威瑞仪器仪表有限公司 生产代理销售：实验检测设备 气象科学仪器设备
Tel:029-88186182 Web:www.qixiangzhan.cn Email:sxvery@163.com

WARNING! Make sure that you prepare or connect only de-energized wires.

CAUTION! To avoid exceeding the maximum ratings in any condition, the voltages must be checked with no load at the power supply output.

More information

- Power management (page 56)

5.2 Power management

The power consumption varies significantly, depending on the selected operating mode or protocol, the data interface type, the sensor configuration, and the measurement and reporting intervals.

Lowest consumption is achieved with the native SDI-12 mode, typically about 1 mW in standby (0.1 mA at 12 V), while with ASCII RS-232 or continuous SDI-12 modes it is about 18 mW in standby. Any activated sensor measurement adds its own extra consumption to the standby power.

The following table includes some hints for economic power management. The consumption values are all defined for 12 V supply. For 6 V supply, multiply the values by 1.9. For 24 V supply, multiply the values by 0.65.

Table 11 Standby power consumption

Mode	Standby	Wind			
		4 Hz sampling rate		1 Hz sampling rate	
		Continuous measurement	10 s average every 2 min	Continuous measurement	10 s average every 2 min
RS-232 RS-485 RS-422 SDI-12 continuous	1.5 mA	+4.5 mA	+ 0.6 mA	+1.3 mA	+0.2 mA
SDI-12 native	0.1 mA	N/A	+1 mA	N/A	+0.7 mA
Analog output (mA)	N/A	16 ... 90 mA	16 ... 90 mA	16 ... 90 mA	16 ... 90 mA

陕西威瑞仪器仪表有限公司 生产代理销售：实验检测设备 气象科学仪器设备
Tel:029-88186182 Web:www.qixiangzhan.cn Email:sxvery@163.com

Mode	Standby	Pt1000	Level	Tipping bucket	Solar radiation	Precipitation
						Continuous rain
RS-232 RS-485 RS-422 SDI-21 continuous	1.5 mA	+0.1 mA	+0.4 mA	+0.1 mA	+0.4 mA	+0.4 mA
SDI-12 native	0.1 mA	+0.1 mA (interval 5 s)	+0.4 mA (interval 5 s)	+0.1 mA (interval 1 s)	+0.4 mA (interval 5 s)	+0.4 mA (interval 5 s)
Analog output (mA)	N/A	N/A	N/A	N/A	N/A	N/A

SDI-12 native mode power save is based on measurements only when requested. Due to SDI-12 polling mode operation, only periodic wind measurement results are comparable with other communication modes. Continuous measurement is not relevant for SDI-12 mode. Every measurement request increases power consumption for the first time measurement. The total SDI-12 power consumption can be changed by changing measurement request intervals.

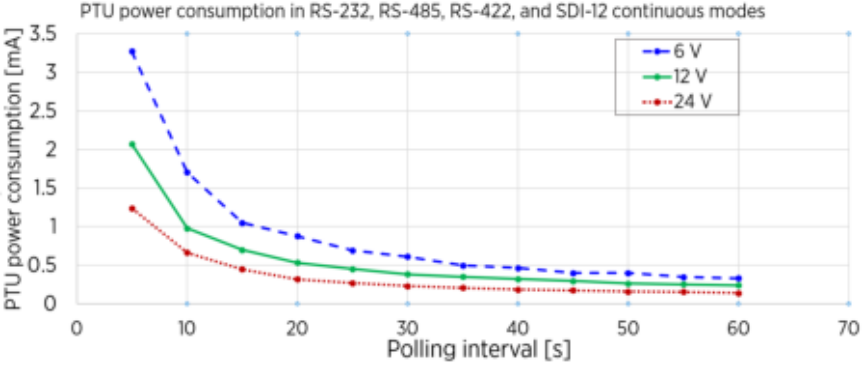

Figure 17 PTU power consumption in RS-232, RS-485, RS-422, and SDI-12 continuous modes

陕西威瑞仪器仪表有限公司 生产代理销售：实验检测设备 气象科学仪器设备
Tel:029-88186182 Web:www.qixiangzhan.cn Email:sxvery@163.com

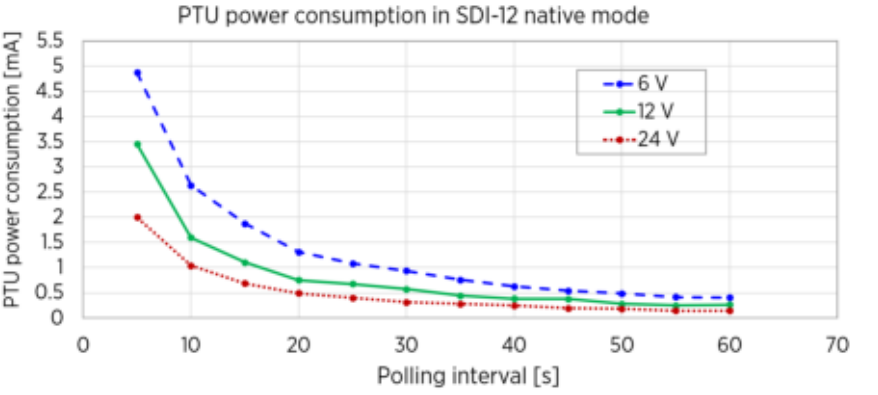

Figure 18 PTU power consumption in SDI-12 native mode

Table 12 Economic power management

Measurement	Consumption
Wind measurement	The most consuming operation in the system, with extra variations depending on how the wind is reported. If you need long time averages and measure wind constantly, there are no large differences between requesting periods or modes. Fully continuous wind measurement with a 4 Hz sampling rate adds about 4.5 mA to the standby current, depending on the wind and some other climatic conditions. A 10-second average requested every 2 minutes consumes 8 times less. 1 Hz sampling rate decreases it to about one fourth.
Continuous precipitation	Adds approximately 0.4 mA to the standby consumption. A single, isolated raindrop increases current consumption for about 10 seconds (continued, if more raindrops are detected within the 10-second period).
ASCII RS-232 standby consumption	Typically 1.5 mA. The jumper wires across TX+/RX+ and TX-/RX- (only necessary in 2-wire RS-485) increase consumption slightly.
ASCII RS-232 polling mode and automatic mode	Equal consumption. The automatic mode is a little more economic, since interpreting the poll takes more processing time than starting the automatic message. However, note that when selecting the precipitation autosend mode, the sub-modes M=R and M=C can cause extra consumption in rainy conditions due to triggers for sending messages about rain incidents.
ASCII RS-232 data transmission	Adds 1 ... 2 mA to the standby consumption during the message sending time. Note that the host device's input (data logger or PC) can constantly draw some current from the TX line.

陕西威瑞仪器仪表有限公司 生产代理销售：实验检测设备 气象科学仪器设备
Tel:029-88186182 Web:www.qixiangzhan.cn Email:sxvery@163.com

Measurement	Consumption
RS-485 and RS-422 data interfaces	Consume about the same amount of power as RS-232. With long data cables the data consumption during data transmission can be much higher, especially when termination resistors are used. On the other hand, the RS-485 driver is in high impedance state when not transmitter. In idle state, no current can be drawn by the host input.
NMEA modes	Consume about the same as ASCII modes.
SDI-12 native mode	M=S, C=1 has the lowest stand by consumption, about 0.1 mA. Note that it can also be used with RS-232 terminals. See the SDI-12 connection diagram in Data communication interfaces (page 68). In this case, the commands must be in SDI-12 format, but no special line break signals are required. The SDI-12 mode is for polling only.
SDI-12 continuous mode	M=R consumes about the same as the ASCII RS-232 mode.

If the optional sensor heating is enabled, SDI-12 native mode consumes the same as ASCII RS-232 mode.
When heating is on (or the temperature is such that it should be on), some **`0.08 mA`** additional current is drawn from the operational power supply.

While in service mode and/or while supplied through the service port the transmitter consumes **`0.3 ... 0.6 mA`** more than in normal mode, when supplied through the main port (M12 connector or screw terminals). When supplied through the service port, the minimum voltage level for reliable operation is 6 V. This can also be seen in the supply voltage reading of the supervisor message - the Vs value is 1 V lower than the actual input voltage.

5.3 Wiring with 8-pin M12 connector

5.3.1 External wiring

The 8-pin M12 connector is located on the bottom of the transmitter.

陕西威瑞仪器仪表有限公司 生产代理销售：实验检测设备 气象科学仪器设备
Tel:029-88186182 Web:www.qixiangzhan.cn Email:sxvery@163.com

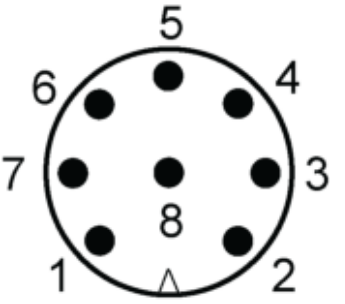

Figure 19 Pins of 8-pin M12 connector

The following table shows the pin connections for the 8-pin M12 connector and the wire colors of the respective M12 cable (optional, 2 or 10 m).

Table 13 Pinouts for WXT530 series serial interfaces and power supplies

Wire color	M12 pin #	RS-232 [1]	SDI-12 [1]	RS-485 [1]	RS-422 [1]	mA output [2]
White	1	Data in (RxD)	Data in/out (Rx)	-	Data out (TX-)	Iout2
Brown	2	Vin+ (operating)	Vin+ (operating)	Vin+ (operating)	Vin+ (operating)	Vin+ (operating)
Green	3	GND for data	GND for data	GND for data	Data out (TX+)	GND Iout2
Yellow	4	Vh+ (heating)	Vh+ (heating)	Vh+ (heating)	Vh+ (heating)	Vh+ (heating)
Gray	5	-	-	Data+	Data in (RX+)	GND Iout1
Pink	6	Vh- (heating)	Vh- (heating)	Vh- (heating)	Vh- (heating)	Vh- (heating)
Blue	7	Data out (TxD)	Data in/out (Tx)	Data-	Data in (RX-)	Iout1
Red	8	Vin- (operating)	Vin- (operating)	Vin- (operating)	Vin- (operating)	Vin- (operating)

1) *Available for all models*
2) *WXT532 option*

Table 14 Screw terminal pinouts

Screw terminal	RS-232	SDI-12	RS-485	RS-422
10 HTG-	Vh- (heating)	Vh- (heating)	Vh- (heating)	Vh- (heating)

陕西威瑞仪器仪表有限公司 生产代理销售：实验检测设备 气象科学仪器设备
Tel:029-88186182 Web:www.qixiangzhan.cn Email:sxvery@163.com

Screw terminal	RS-232	SDI-12	RS-485	RS-422
9 HTG+	Vh+ (heating)	Vh+ (heating)	Vh+ (heating)	Vh+ (heating)
8 SGND	GND for data	GND for data	GND for data	GND for data
7 RXD	Data in (RxD)	Data in (Rx)	-	-
6 TX+	-	-	Data+	Data out (TX-)
5 TX-	Data out (TxD)	Data out (Tx)	Data -	Data out (TX+)
4 RX+	-	-	-	Data in (Rx+)
3 RX-	-	-	-	Data in (Rx-)
2 VIN-	Vin- (operating)	Vin- (operating)	Vin- (operating)	Vin- (operating)
1 VIN+	Vin+ (operating)	Vin+ (operating)	Vin+ (operating)	Vin+ (operating)

The signal names Data in (RxD) and Data out (TxD) in the table describe the direction of data flow as seen from the transmitter.

Ground the external wiring shield. The shield is not connected inside WXT530.

In true SDI-12, Data in (Rx) and Data out (Tx) lines must be combined.

Short circuit loops are required between terminals 3 & 5, and 4 & 6 for RS-485. See Internal wiring (page 62).

Do not use operating power supply ground (VIN-) for communication ground (RS-232, RS-485, SDI-12, RS-422). Use SGND communication ground (GND).

Table 15 WXT532 mA output option screw terminal pinouts

Screw terminal	mA output
10 HTG-	Vh- (heating)
9 HTG+	Vh+ (heating)
8 GND2	GND Iout2
7 Iout2	Iout2 (direction)

陕西威瑞仪器仪表有限公司 生产代理销售：实验检测设备 气象科学仪器设备
Tel:029-88186182 Web:www.qixiangzhan.cn Email:sxvery@163.com

Screw terminal	mA output
6 GND1	GND Iout1
5 Iout1	Iout1 (wind)
4 NC	-
3 NC	-
2 VIN-	Vin- (operating)
1 VIN+	Vin+ (operating)

5.3.2 Internal wiring

By default, the 8-pin M12 connector is wired for:

- RS-232
- RS-485
- SDI-12
- RS-422
- mA output

Ground the external wiring shield. The shield is not connected inside WXT.

Table 16 RS-232 wiring

Internal wiring				External wiring	
Pin #	**Internal connector pin**	**Internal connector pin function for RS-232**	**Internal wiring for RS-232**	**M12 pin**	**External wiring for RS-232**
1	VIN+	Vin+ (operating)	Brown	2	Brown
2	VIN-	Vin- (operating GND)	Red	8	Red
3	RX-				
4	RX+				
5	TX-	Data out (TxD)	Blue	7	Blue
6	TX+		Gray	5	Gray
7	RXD	Data in (RxD)	White	1	White
8	SGND	Communication ground (GND)	Green	3	Green
9	HTG+	Vh+ (heating)	Yellow	4	Yellow
10	HTG-	Vh- (heating)	Pink	6	Pink

陕西威瑞仪器仪表有限公司 生产代理销售：实验检测设备 气象科学仪器设备
Tel:029-88186182 Web:www.qixiangzhan.cn Email:sxvery@163.com

Internal wiring				External wiring	
Pin #	**Internal connector pin**	**Internal connector pin function for RS-232**	**Internal wiring for RS-232**	**M12 pin**	**External wiring for RS-232**
					Shield

Table 17 RS-485 wiring

Internal wiring				External wiring	
Pin #	**Internal connector pin**	**Internal connector pin function for RS-485**	**Internal wiring for RS-485**	**M12 pin**	**External wiring for RS-485**
1	VIN+	Vin + (Operating)	Brown	2	Brown
2	VIN-	Vin- (Operating GND)	Red	8	Red
3	RX-	Data-	Loop with Blue		
4	RX+	Data+	Loop with Gray		
5	TX-	Data-	Blue	7	Blue
6	TX+	Data+	Gray	5	Gray
7	RXD		White	1	White
8	SGND	Communication ground (GND)	Green	3	Green
9	HTG+	Vh+ (Heating)	Yellow	4	Yellow
10	HTG-	Vh- (Heating)	Pink	6	Pink
					Shield

Table 18 SDI-12 wiring

Internal wiring				External wiring	
Pin #	**Internal connector pin**	**Internal connector pin function for SDI-12**	**Internal wiring for SDI-12**	**M12 pin**	**External wiring for SDI-12**
1	VIN+	Vin+ (Operating)	Brown	2	Brown
2	VIN-	Vin- (Operating GND)	Red	8	Red
3	RX-				
4	RX+				
5	TX-	Data in/out (Tx)	Blue	7	Blue
6	TX+		Gray	5	Gray
7	RXD	Data in/out (Rx)	White	1	White

陕西威瑞仪器仪表有限公司 生产代理销售：实验检测设备 气象科学仪器设备
Tel:029-88186182 Web:www.qixiangzhan.cn Email:sxvery@163.com

Internal wiring				External wiring	
Pin #	**Internal connector pin**	**Internal connector pin function for SDI-12**	**Internal wiring for SDI-12**	**M12 pin**	**External wiring for SDI-12**
8	SGND	Communication ground (GND)	Green	3	Green
9	HTG+	Vh+ (Heating)	Yellow	4	Yellow
10	HTG-	Vh- (Heating)	Pink	6	Pink
					Shield

Table 19 RS-422 wiring

Internal wiring				External wiring	
Pin #	**Internal connector pin**	**Internal connector pin function for RS-422**	**Internal wiring for RS-422**	**M12 pin**	**External wiring for RS-422**
1	VIN+	Vin+ (Operating)	Brown	2	Brown
2	VIN-	Vin- (Operating GND)	Red	8	Red
3	RX-	Data in (RX-)	Blue	7	Blue
4	RX+	Data in (RX+)	Gray	5	Gray
5	TX-	Data out (TX-)	White	1	White
6	TX+	Data out (TX+)	Green	3	Green
7	RXD				
8	SGND				
9	HTG+	V+ (Heating)	Yellow	4	Yellow
10	HTG-	Vh- (Heating)	Pink	6	Pink
					Shield

Table 20 mA output wiring

Internal wiring				External wiring	
Pin #	**Internal connector pin**	**Internal connector pin function for mA output**	**Internal wiring for mA output**	**M12 pin**	**External wiring for mA output**
1	VIN+	Vin+ (operating)	Brown	2	Brown
2	VIN-	Vin- (operating GND)	Red	8	Red
NC	NC				
NC	NC				

陕西威瑞仪器仪表有限公司 生产代理销售：实验检测设备 气象科学仪器设备
Tel:029-88186182 Web:www.qixiangzhan.cn Email:sxvery@163.com

Internal wiring				External wiring	
Pin #	**Internal connector pin**	**Internal connector pin function for mA output**	**Internal wiring for mA output**	**M12 pin**	**External wiring for mA output**
Iout1	Iout1	Iout1	Blue	7	Blue
GND	GND	GND	Gray	5	Gray
Iout2	Iout2	Iout2	White	1	White
GND	GND	GND	Green	3	Green
9	HTG+	Vh+ (heating)	Yellow	4	Yellow
10	HTG-	Vh- (heating)	Pink	6	Pink
					Shield

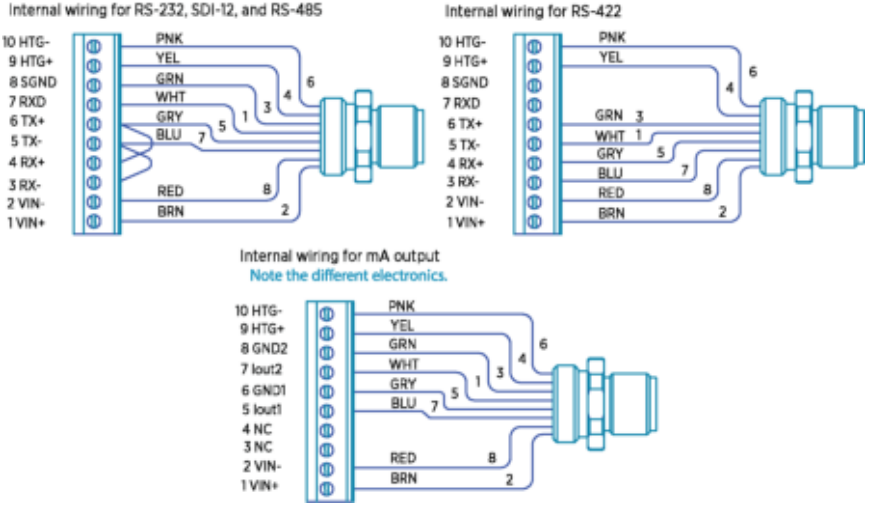

Figure 20 Internal wiring for RS-232, SDI-12, and RS-485

5.4 Wiring with screw terminals

1. Loosen the 3 long screws at the bottom of the transmitter.
2. Pull out the bottom part of the transmitter.
3. Insert the power supply wires and signal wires through the cable gland(s) in the bottom of the transmitter.

   Cable glands are included in the optional bushing and grounding kit (222109).

陕西威瑞仪器仪表有限公司 生产代理销售：实验检测设备 气象科学仪器设备
Tel:029-88186182 Web:www.qixiangzhan.cn Email:sxvery@163.com

4. Connect the wires as shown in the following table.
5. Replace the bottom part and tighten the 3 screws.

   Make sure that the flat cable does not get squeezed or stuck between the top and the funnel for the flat cable and is properly connected. To make sure that the radiation shield stays straight, do not tighten the screws all the way in one go. Do not overtighten.

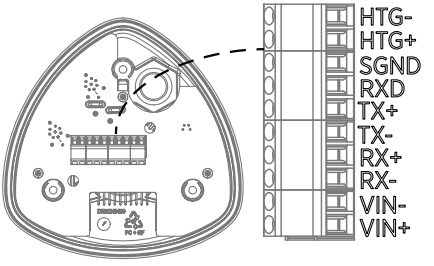

Figure 21 Screw terminal block

Table 21 Screw terminal pinouts for serial interfaces and power supplies

Screw terminal PIN	RS-232	SDI-12	RS-485	RS-422	mA output
1 VIN+	Vin+ (operating)	Vin+ (operating)	Vin+ (operating)	Vin+ (operating)	Vin+ (operating)
2 VIN-	Vin- (operating GND)	Vin- (operating GND)	Vin- (operating GND)	Vin- operating GND)	Vin- (operating GND)
3 RX-			Data-	Data in (RX-)	
4 RX+			Data+	Data in (RX +)	
5 TX-	Data out (TxD)	Data in/out (Tx)	Data-	Data out (TX-)	Iout1
6 TX+			Data+	Data out (TX +)	GND
7 RXD	Data in (RxD)	Data in/out (Rx)			Iout2
8 SGND	Communication ground (GND)	Communication ground (GND)	Communication ground (GND)		GND
9 HTG+	Vh+ (heating)	Vh+ (heating)	Vh+ (heating)	Vh+ (heating)	Vh+ (heating)
10 HTG-	Vh- (heating)	Vh- (heating)	Vh- (heating)	Vh- (heating)	Vh- (heating)

陕西威瑞仪器仪表有限公司 生产代理销售：实验检测设备 气象科学仪器设备
Tel:029-88186182 Web:www.qixiangzhan.cn Email:sxvery@163.com

Use a shielded cable and ground the external wiring shield.

For the SDI-12 mode, the Data in/out (Tx) and Data in/out (Rx) signals must be connected internally by looping pins 5 and 7, or, externally by looping the M12 pins 1 and 7.

If you ordered the transmitter with any other serial communication than RS-422, the internal wiring has loops between pins 3 and 5, and between 4 and 6. For RS-422 operation, you must remove the loops. For the RS-485 communication mode, short-circuit loops are required between pins 3-5 and 4-6.
3 = RX Data-, Loop with Blue
4 = RX Data+, Loop with Gray
5 = TX Data-, Blue wire
6 = TX Data+, Gray wire
The transmitter has by default factory-installed loops in all serial communication options except RS-422.
For units with no data connector and other communication interface than RS-422, the loop wires are delivered in a plastic bag.

陕西威瑞仪器仪表有限公司 生产代理销售：实验检测设备 气象科学仪器设备
Tel:029-88186182 Web:www.qixiangzhan.cn Email:sxvery@163.com

5.5 Data communication interfaces

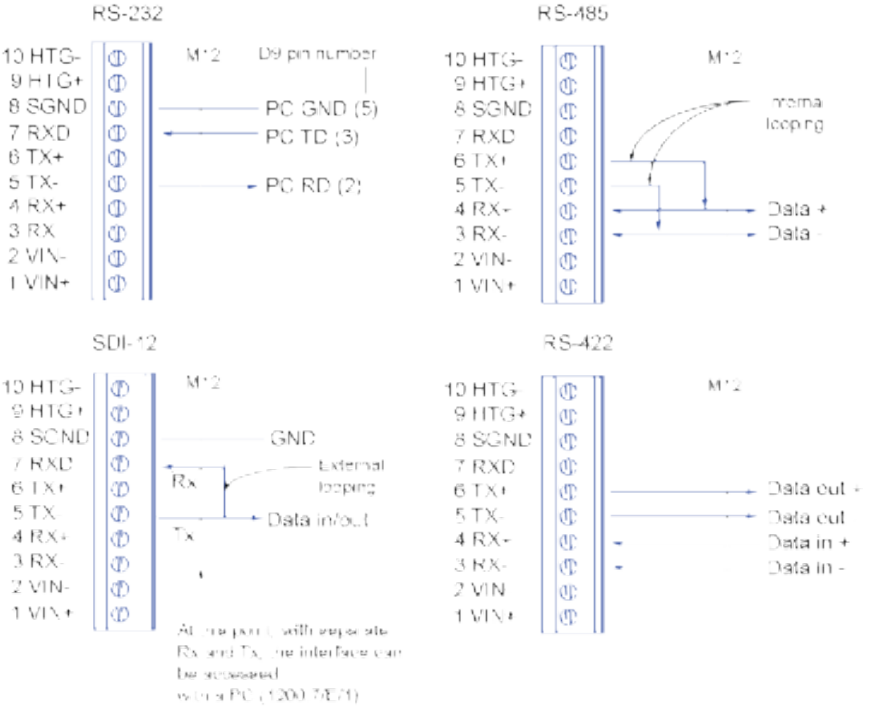

Figure 22 Data communication interfaces

With RS-485 and RS-422 interfaces, if the baud rate is 9600 or higher and the cabling from the transmitter to the host is 600 m (2000 ft) or longer, you must use termination resistors at both ends of the line.

The WXT530 series transmitters with serial communication interface have built-in termination options. Plain resistor (R) termination or termination with resistor connected series with capacitor can be selected with jumpers. By default, no termination is selected. In RS-422 mode, built-in termination is only between RX- and RX+ lines.

If external line termination is used, resistor range 100 ... 180 Ω is suitable for twisted pair lines. Resistors are connected across RX- to RX+ and across TX- to TX+ (with RS-485 only one resistor needed).

陕西威瑞仪器仪表有限公司 生产代理销售：实验检测设备 气象科学仪器设备
Tel:029-88186182 Web:www.qixiangzhan.cn Email:sxvery@163.com

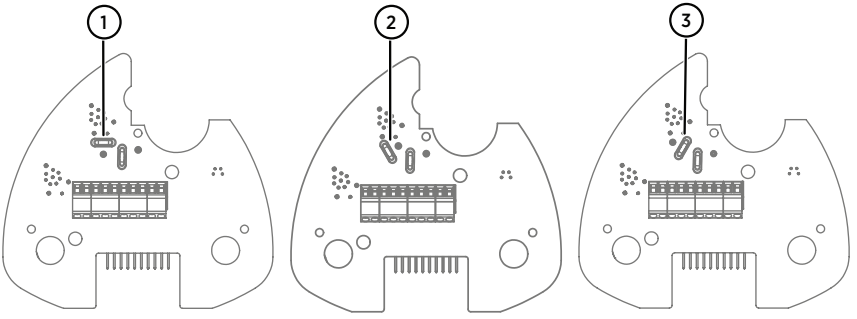

Figure 23 Termination jumper positions

1 **NO**, no termination
2 **R**, 121 Ω termination
3 **RC**, 121 Ω series with 4.7 nF capacitor termination

The termination resistors increase power consumption significantly during data transmission. If low power consumption is necessary, connect a 0.1 uF capacitor in series with each external termination resistor or use internal RC termination.

Note that the RS-485 interface can be used with four wires (as RS-422).

The main difference between the RS-485 and RS-422 interfaces is their protocol:

- In the RS-422 mode the transmitter is constantly enabled
- In the RS-485 mode the transmitter is enabled only during transmission (for allowing the host's transmission in the 2-wire case).

The RS-232 output swings only between 0 ... +4.5 V. This is enough for modern PC inputs. The recommended maximum for the RS-232 line length is 100 m (300 ft) with baud rate 1200. Higher rates require shorter distance, for instance, 30 m (100 ft) with baud rate 9600.

If you use the transmitter on an RS-485 bus with other polled devices, always disable the error messaging feature with the command: **`0SU,S=N<crlf>`**.

陕西威瑞仪器仪表有限公司 生产代理销售：实验检测设备 气象科学仪器设备
Tel:029-88186182 Web:www.qixiangzhan.cn Email:sxvery@163.com

6. Connection options

6.1 Communication protocols

Once the transmitter is properly connected and powered up, the data transmission can start.

Table 22 Available serial communication protocols

Serial interface	Available communication protocols
RS-232	ASCII automatic and polled NMEA 0183 v 3.0 automatic and query SDI-12 v 1.3 and SDI-12 v 1.3 continuous measurement
RS-485	ASCII automatic and polled Modbus RTU NMEA 0183 v 3.0 automatic and query SDI-12 v 1.3 and SDI-12 v 1.3 continuous measurement
RS-422	ASCII automatic and polled NMEA 0183 v 3.0 automatic and query SDI-12 v 1.3 and SDI-12 v 1.3 continuous measurement
SDI-12	SDI-12 v 1.3 and SDI-12 v 1.3 continuous measurement

You chose the communication protocol when placing your order. To check the communication settings, see and/or change the protocol or other communication settings, see the following sections.

You need a converter to access the RS-485 and RS-422 interfaces directly with a standard PC.

You can access RS-232 and SDI-12 with a standard PC terminal, if for SDI-12, the Data in/out lines have not been combined inside the transmitter.

6.2 Connection cables

The following table shows the connection cable options for the WXT530 series transmitters. The USB cables connect the transmitter to a PC using a standard USB port. The USB cables also provide operation power to the transmitter when connected. The USB cables do not provide power to the sensor heating.

陕西威瑞仪器仪表有限公司 生产代理销售：实验检测设备 气象科学仪器设备
Tel:029-88186182 Web:www.qixiangzhan.cn Email:sxvery@163.com

Table 23 Connection cable options

Cable name	Connector on sensor end	Connector on user end	Order code
USB service cable (1.4 m)	M8 female	USB type A	220614 (includes Vaisala Configuration Tool)
USB RS-232/RS-485 cable (1.4 m)	M12 female	USB type A	220782
2-meter cable	M12 female	No connector; open end wires	222287
10-meter cable	M12 female	No connector; open end wires	222288
40-meter cable	No connector; open end wires	No connector; open end wires	217020
10-meter extension cable	M12 female	M12 male	CBL210679
50-meter cable [1)]	M12 female	No connector; open end wires	245931

1) If you use heating, you need a 24 V DC power supply with the 50-meter cable.

If you use the USB RS-232/RS-485 cable for a permanent installation, Vaisala recommends that you use the WSP152 surge protector to protect the host PC against surges entering through the USB port.

6.3 Connecting with service cable

The USB service cable has a 4-pin M8 connector for service port. Use the service cable connection for checking and changing device settings. When making the changes, use the Vaisala Configuration Tool or a standard PC terminal program.

陕西威瑞仪器仪表有限公司 生产代理销售：实验检测设备 气象科学仪器设备
Tel:029-88186182 Web:www.qixiangzhan.cn Email:sxvery@163.com

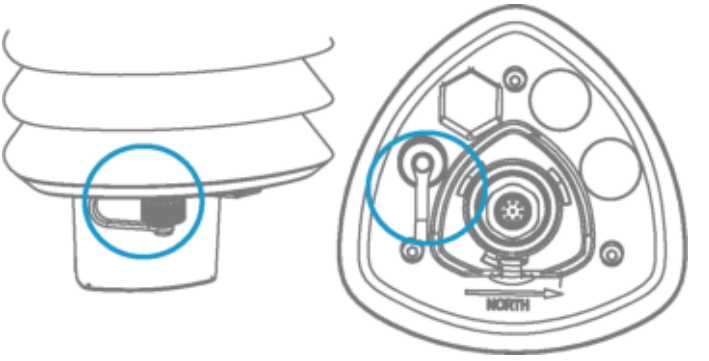

Figure 24 Service cable connection

The USB service cable is included in the Service Pack 2.

When you connect the USB service cable between the service connector and PC USB port, the service port settings are forced automatically to RS-232 / 19200, 8, N, 1, and the main serial port at the M12 connector at the screw terminals is disabled.

1. Use the USB service cable to establish a connection between the USB port of your PC and the M8 service port connector on the bottom plate of the transmitter.
2. Open the Vaisala Configuration Tool or a terminal program.
3. Select the COM port reserved for the USB cable and select the following default communication settings:

   ```
   19200, 8, N, 1.
   ```

4. Use the Vaisala Configuration Tool or a terminal program to make the configuration changes.
5. When removing the service cable, support the transmitter while pulling the 4-pin M8 connector for service port.

   The connection is tight, and it is possible to change the alignment of the transmitter if you pull too hard.

Changes to the serial interface/communication protocol/baud settings take place when you disconnect the service cable or reset the transmitter.
If these settings are not changed during the service connection session, the original main port settings (at M12 and screw terminals) are returned when the service cable is disconnected from either end.

More information

- Communication setting commands (page 73)

陕西威瑞仪器仪表有限公司 生产代理销售：实验检测设备 气象科学仪器设备
Tel:029-88186182 Web:www.qixiangzhan.cn Email:sxvery@163.com

6.3.1 Connecting through M12 bottom connector or screw terminal

You can check and change the device settings through the 8-pin M12 bottom connector or screw terminal.

To do this, you must know the device communication settings, have a suitable cable between the device and the host, and, if needed, use a converter (for example, RS-485/422 to RS-232, if the host is a PC). The following table shows the factory default settings:

Table 24 Default serial communication settings for M12/screw terminal connection

Serial interface	Serial settings
SDI-12	1200 baud, 7, E, 1
RS-232 ASCII	19200 baud, 8, N, 1
RS-485 ASCII	19200 baud, 8, N, 1
RS-485 Modbus RTU	19200 baud, 8, E, 1
RS-422 ASCII	19200 baud, 8, N, 1
RS-422 NMEA	4800 baud, 8, N, 1

6.4 Communication setting commands



In this section, the commands the user types are presented in normal text while the responses of the transmitter are presented in *italic*.

6.4.1 Checking current communication settings (aXU)

Use this command to request the current communication settings.

Command format in ASCII and NMEA 0183:

```
aXU<cr><lf>
```

Command format in SDI-12:

```
aXXU!
```

Parameter	Description
a	Device address, which can consist of the following characters: 0 (default) ... 9, A ... Z, a ... z.

陕西威瑞仪器仪表有限公司 生产代理销售：实验检测设备 气象科学仪器设备
Tel:029-88186182 Web:www.qixiangzhan.cn Email:sxvery@163.com

Parameter	Description
XU	Device settings command in ASCII and NMEA 0183
XXU	Device settings command in SDI-12
<cr><lf>	Command terminator in ASCII and NMEA 0183
!	Command terminator in SDI-12

Example response in ASCII and NMEA 0183:

```
aXU,A=a,M=[M],T=[T],C=[C],I=[I],B=[B],D=[D],P=[P],S=[S],
L=[L],N=[N],V=[V],H=[H],O=[O]<cr><lf>
```

Example response in SDI-12:

```
aXXU,A=a,M=[M],T=[T],C=[C],I=[I],B=[B],D=[D],P=[P],S=[S],
L=[L],N=[N],V=[V],H=[H],O=[O]<cr><lf>
```

You can add the `Id` information field in the supervisor data message to provide identifying information in addition to the transmitter address. The information field is set as part of the factory settings. You can only modify it with the Vaisala Configuration Tool.

More information

- Supervisor message (page 131)
- General unit settings (page 202)

6.4.2 Settings fields

Parameter	Description
a	Device address
XU	Device settings command in ASCII and NMEA 0183
XXU	Device settings command in SDI-12
[A]	Address: 0 (default) ... 9, A ... Z, a ... z

陕西威瑞仪器仪表有限公司 生产代理销售：实验检测设备 气象科学仪器设备
Tel:029-88186182 Web:www.qixiangzhan.cn Email:sxvery@163.com

Parameter	Description
[M]	Communication protocol:
	A = ASCII, automatic [1)]
	a = ASCII, automatic with CRC [1)]
	P = ASCII, polled
	p = ASCII, polled, with CRC
	N = NMEA 0183 v3.0, automatic [1)]
	Q = NMEA 0183 v3.0, query (= polled)
	M = Modbus RTU
	S = SDI-12 v1.3
	R = SDI-12 v1.3 continuous measurement
[T]	Test parameter (for testing use only)
[C]	Serial interface:
	1 = SDI-12
	2 = RS-232
	3 = RS-485
	4 = RS-422
[I]	Automatic repeat interval for composite data message: 1 ... 3600 s, 0 = no automatic repeat [1)]
[B]	Baud rate: 1200, 2400, 4800, 9600, 19200, 38400, 57600, 115200
[D]	Data bits: 7, 8
[P]	Parity:
	O = Odd
	E = Even
	N = None
[S]	Stop bits: 1, 2
[L]	RS-485 line delay: 0 ... 10000 ms. Defines the delay between the last character of the query and the first character of the response message from the transmitter. During the delay, the transmitter is disabled. Effective in ASCII, polled and NMEA 0183 query protocols. Effective when RS-485 is selected (C = 3).
[N]	Name of the device: WXT530 (read-only)
[V]	Software version: for example, 1.00 (read-only)

陕西威瑞仪器仪表有限公司 生产代理销售：实验检测设备 气象科学仪器设备
Tel:029-88186182 Web:www.qixiangzhan.cn Email:sxvery@163.com

Parameter	Description
[H]	Parameter locking
	0 = Parameters can be changed
	1 = Parameters locked. Vaisala recommends that you set this parameter to 1 after you have configuration. This prevents accidental changes, for instance, in RS- 485 use when there is interference.
[O] [2)]	Modbus address: 1 = default, available address IDs 1 ... 247.
<cr><lf>	Response terminator

1) *Do not use automatic composite data message interval (I) at the same time with automatic communication protocols (M=A, a, N).*
2) *The letter O*

There are two SDI-12 modes available for providing the functionality of the SDI-12 v1.3 standard.
The lowest power consumption is achieved with the Native SDI-12 mode (**aXU,M=S**), as it makes measurements and outputs data only on request.
In the continuous SDI-12 mode (**aXU,M=R**) internal measurements are made at a user-configurable update interval. The data is outputted on request.

Example (ASCII and NMEA 0183, device address 0):

```
0XU<cr><lf>
0XU,A=0,M=P,T=0,C=2,I=0,B=19200,D=8,P=N,S=1,L=25,
N=WXT530,V=1.0,H=0,O=1<cr><lf>
```

Example (SDI-12, device address 0):

```
0XXU!0XXU,A=0,M=S,T=0,C=1,I=0,B=1200,D=7,P=E,S=1,L=25,
N=WXT530,V=1.0,H=0,O=1<cr><lf>
```

6.4.3 Changing the communication settings (aXU)

Use this command to change communication settings.

Command format in ASCII and NMEA 0183:

```
aXU,A=x,M=x,C=x,I=x,B=x,D=x,P=x,S=x,L=x,H=x,O=x<cr><lf>
```

Command format in SDI-12:

```
aXXU,A=x,M=x,C=x,I=x,B=x,D=x,P=x,S=x,L=x,H=x,O=x!
```


陕西威瑞仪器仪表有限公司 生产代理销售：实验检测设备 气象科学仪器设备
Tel:029-88186182 Web:www.qixiangzhan.cn Email:sxvery@163.com

A, M, C, I, B, D, P, S, L, H, O	The communication setting fields.
x	Input value for the setting
<cr><lf>	Command terminator in ASCII and NMEA 0183
!	Command terminator in SDI-12

When changing the serial interface and communication protocol, note the following:
Each serial interface requires its specific wiring and/or jumper settings.
Change first the serial interface field C and then the communication protocol field M.
Changing the serial interface to SDI-12 (C=1) automatically changes the baud settings to 1200, 7, E, 1 and the communication protocol to SDI-12 (M=S).

Reset the transmitter to validate the changes of communication parameters by disconnecting the service cable or using the reset command **aXZ**.

Example (ASCII and NMEA 0183, device address 0):

Changing the device address from 0 to 1:

```
0XU,A=1<cr><lf>

1XU,A=1<cr><lf>
```

Checking the changed settings:

```
1XU<cr><lf>

1XU,A=1,M=P,T=1,C=2,I=0,B=19200,D=8,P=N,S=1,L=25, N=WXT530V=1.0,H=0,O=1<cr><lf>
```

Example (ASCII, device address 0):

Changing RS-232 serial interface with ASCII, polled communication protocol and baud settings 19200, 8, N, 1 to RS-485 serial interface with ASCII, automatic protocol and baud settings 9600, 8, N, 1.

Checking the settings:

```
0XU<cr><lf>

0XU,A=0,M=P,C=2,I=0,B=19200,D=8,P=N,S=1,L=25,N=WXT530, V=1.0,H=0,O=1<cr><lf>
```


陕西威瑞仪器仪表有限公司 生产代理销售：实验检测设备 气象科学仪器设备
Tel:029-88186182 Web:www.qixiangzhan.cn Email:sxvery@163.com

You can change several parameters in the same command as long as the command length does not exceed 32 characters (including command terminator characters ! or <cr><lf>).You do not have to type setting fields you do not wish to change.

Changing several settings with one command:

```
0XU,M=A,C=3,B=9600<cr><lf>

0XU,M=A,C=3,B=9600<cr><lf>
```

Checking the changed settings:

```
0XU<cr><lf>

0XU,A=0,M=A,T=1,C=3,I=0,B=9600,D=8,P=N,S=1,L=25, N=WXT530,V=1.0,H=0,O=1<cr><lf>
```

More information

- Power management (page 53)
- Settings fields (page 74)

陕西威瑞仪器仪表有限公司 生产代理销售：实验检测设备 气象科学仪器设备
Tel:029-88186182 Web:www.qixiangzhan.cn Email:sxvery@163.com

7. Retrieving data messages

Each communication protocol has its own section for data message commands.

Type the commands in CAPITAL letters.

The parameter order in messages is as follows:
Wind (M1): Dn Dm Dx Sn Sm Sx
PTU (M2): Ta Tp Ua Pa
Rain (M3): Rc Rd Ri Hc Hd Hi Rp Hp
Supv (M5): Th Vh Vs Vr Id
Comp (M): Wind PTU Rain Supv (parameters in above order)
The order of the parameters is fixed, but you can exclude any parameter from the list when configuring the transmitter.

7.1 General commands

With general commands you can reset the transmitter.

If error messaging is disabled, the general commands given in ASCII and NMEA formats do not work.

7.1.1 Reset (aXZ)

This command performs software reset on the device.

Command format in ASCII and NMEA 0183:

```
aXZ<cr><lf>
```

Command format in SDI-12:

```
aXZ!
```

a	Device address
XZ	Reset command
<cr><lf>	Command terminator in ASCII and NMEA 0183
!	Command terminator in SDI-12

陕西威瑞仪器仪表有限公司 生产代理销售：实验检测设备 气象科学仪器设备
Tel:029-88186182 Web:www.qixiangzhan.cn Email:sxvery@163.com

The response depends on the communication protocol as shown in the examples.

Example (ASCII):

```
0XZ<cr><lf>

0TX,Start-up<cr><lf>
```

Example (SDI-12):

```
0XZ!0<cr><lf> (=device address)
```

Example (NMEA 0183):

```
0XZ<cr><lf>

$WITXT,01,01,07,Start-up*29
```

7.1.2 Precipitation counter reset (aXZRU)

This command resets the rain and hail accumulation and duration parameters **Rc**, **Rd**, **Hc**, and **Hd**.

Command format in ASCII and NMEA 0183:

```
aXZRU<cr><lf>
```

Command format in SDI-12:

```
aXZRU!
```

a	Device address
XZRU	Precipitation counter reset command
<cr><lf>	Command terminator in ASCII and NMEA 0183
!	Command terminator in SDI-12

Example (ASCII):

```
0XZRU<cr><lf>

0TX,Rain reset<cr><lf>
```

Example (SDI-12):

```
0XZRU!0<cr><lf> (= device address)
```


陕西威瑞仪器仪表有限公司 生产代理销售：实验检测设备 气象科学仪器设备
Tel:029-88186182 Web:www.qixiangzhan.cn Email:sxvery@163.com

Example (NMEA 0183):

```
0XZRU<cr><lf>

$WITXT,01,01,10,Rain reset*26<cr><lf>
```

7.1.3 Precipitation intensity reset (aXZRI)

This command resets the rain and hail intensity parameters **Ri**, **Rp**, **Hi**, and **Hp**.

Command format in ASCII and NMEA 0183:

```
aXZRI<cr><lf>
```

Command format in SDI-12:

```
aXZRI!
```

a	Device address
XZRI	Precipitation intensity reset command
<cr><lf>	Command terminator in ASCII and NMEA 0183
!	Command terminator in SDI-12

The precipitation counter and precipitation intensity parameters are reset also when the supply voltage is disconnected, the command **aXZ** is issued, precipitation counter reset mode is changed, or when the precipitation/surface hits units are changed.

Example (ASCII):

```
0XZRI<cr><lf>

0TX,Inty reset<cr><lf>
```

Example (SDI-12):

```
0XZRI!0<cr><lf> (= device address)
```

Example (NMEA 0183):

```
0XZRI<cr><lf>

$WITXT,01,01,11,Inty reset*39<cr><lf>
```


陕西威瑞仪器仪表有限公司 生产代理销售：实验检测设备 气象科学仪器设备
Tel:029-88186182 Web:www.qixiangzhan.cn Email:sxvery@163.com

7.1.4 Measurement reset (aXZM)

This command interrupts all ongoing measurements except rain measurement and restarts them.

Command format in ASCII and NMEA 0183:

```
aXZM<cr><lf>
```

Command format in SDI-12:

```
aXZM!
```

a	Device address
XZM	Measurement break command
<cr><lf>	Command terminator in ASCII and NMEA 0183
!	Command terminator in SDI-12

Example (ASCII):

```
0XZM<cr><lf>

0TX,Measurement reset<cr><lf>
```

Example (SDI-12):

```
0XZM!0 (= device address)
```

Example (NMEA 0183):

```
0XZM<cr><lf>

$WITXT,01,01,09,Measurement reset*50<cr><lf>
```

7.2 ASCII protocol

7.2.1 Abbreviations and units

Table 25 Abbreviations and units

Abbreviation	Name	Unit	Status [1)]
Sn	Wind speed minimum	m/s, km/h, mph, knots	#, M, K, S, N

陕西威瑞仪器仪表有限公司 生产代理销售：实验检测设备 气象科学仪器设备
Tel:029-88186182 Web:www.qixiangzhan.cn Email:sxvery@163.com

Abbreviation	Name	Unit	Status [1]
Sm	Wind speed average	m/s, km/h, mph, knots	#, M, K, S, N
Sx	Wind speed maximum	m/s, km/h, mph, knots	#, M, K, S, N
Dn	Wind direction minimum	deg	#, D
Dm	Wind direction average	deg	#, D
Dx	Wind direction maximum	deg	#, D
Pa	Air pressure	hPa, Pa, bar, mmHg, inHg	#, H, P, B, M, I
Ta	Air temperature	°C, °F	#, C, F
Tp	Internal temperature	°C, °F	#, C, F
Ua	Relative humidity	%RH	#, P
Rc	Rain accumulation	mm, in	#, M, I
Rd	Rain duration	s	#, S
Ri	Rain intensity	mm/h, in/h	#, M, I
Rp	Rain peak intensity	mm/h, in/h	#, M, I
Hc	Hail accumulation	hits/cm^2, hits/in^2, hits	#, M, I, H
Hd	Hail duration	s	#, S
Hi	Hail intensity	hits/cm^{2}h, hits/in^{2}h, hits/h	#, M, I, H
Hp	Hail peak intensity	hits/cm^{2}h, hits/in^{2}h, hits/h	#, M, I, H
Th	Heating temperature	°C, °F	#, C, F
Vh	Heating voltage	V	#, N, V, W, F [2]
Vs	Supply voltage	V	#, V
Vr	3.5 V ref. voltage	V	#, V
Id	Information field	alphanumeric	
Tr	Pt1000 temperature	°C, °F	#, C, F
Ra	Aux rain amount	mm	#, M
Sl	Ultrasonic level sensor	m	#, V
Rt	Pt1000 resistance	ohm	#, R
Sr	Solar radiation	W/m^2	#, V

1) *The letters in the status field indicate the unit, the # character indicates invalid data.*
2) *For heating # = heating option is not available (has not been ordered).*

N = heating option is available but has been disabled by the user or the heating temperature is over the high control limit.

陕西威瑞仪器仪表有限公司 生产代理销售：实验检测设备 气象科学仪器设备
Tel:029-88186182 Web:www.qixiangzhan.cn Email:sxvery@163.com

V = heating is on at 50 % duty cycle and the heating temperature is between the high and middle control limits.

W = heating is on at 100 % duty cycle and the heating temperature is between the low and middle control limits.

F = heating is on at 50 % duty cycle and the heating temperature is below the low control limit.

7.2.2 Device address (?)

This command queries the address of the device on the bus.

Command format:

```
?<cr><lf>
```

?	Device address query command
<cr><lf>	Command terminator

Response:

```
b<cr><lf>
```

b	Device address (default = 0)
<cr><lf>	Response terminator.

Example:

```
?<cr><lf>
0<cr><lf>
```

If more than one transmitter is connected to the bus, see Connecting several transmitters on same bus (page 168).

7.2.3 Acknowledge active command (a)

This command checks that a device responds to a data recorder or another device. It asks a sensor to acknowledge its presence on the bus.

Command format:

```
a<cr><lf>
```

a	Device address

陕西威瑞仪器仪表有限公司 生产代理销售：实验检测设备 气象科学仪器设备
Tel:029-88186182 Web:www.qixiangzhan.cn Email:sxvery@163.com

<cr><lf>	Command terminator

Response:

```
a<cr><lf>
```

a	Device address
<cr><lf>	Response terminator

Example:

```
0<cr><lf>
0<cr><lf>
```

7.2.4 Wind data message (aR1)

This command requests the wind data message.

Command format:

```
aR1<cr><lf>
```

a	Device address
R1	Wind message query command
<cr><lf>	Command terminator

Example of the response (the parameter set is configurable):

```
0R1,Dn=236D,Dm=283D,Dx=031D,Sn=0.0M,Sm=1.0M, Sx=2.2M<cr><lf>
```

a	Device address
R1	Wind message query command
Dn	Wind direction minimum (D = degrees)
Dm	Wind direction average (D = degrees)
Dx	Wind direction maximum (D = degrees)
Sn	Wind speed minimum (M = m/s)
Sm	Wind speed average (M = m/s)
Sx	Wind speed maximum (M = m/s)
<cr><lf>	Response terminator

陕西威瑞仪器仪表有限公司 生产代理销售：实验检测设备 气象科学仪器设备
Tel:029-88186182 Web:www.qixiangzhan.cn Email:sxvery@163.com

7.2.5 Pressure, temperature and humidity data message (aR2)

This command requests a pressure, temperature, and humidity data message.

Command format:

```
aR2<cr><lf>
```

a	Device address
R2	Pressure, temperature and humidity message query command
<cr><lf>	Command terminator

Example of the response (the parameter set is configurable):

```
0R2,Ta=23.6C,Ua=14.2P,Pa=1026.6H<cr><lf>
```

a	Device address
R2	Pressure, temperature and humidity message query command
Ta	Air temperature (C = °C)
Ua	Relative humidity (P = % RH)
Pa	Air pressure (H = hPa)
<cr><lf>	Response terminator

7.2.6 Precipitation data message (aR3)

This command requests the precipitation data message.

Command format:

```
aR3<cr><lf>
```

a	Device address
R3	Precipitation message query command
<cr><lf>	Command terminator

Example of the response (the parameter set is configurable):

```
0R3,Rc=0.0M,Rd=0s,Ri=0.0M,Hc=0.0M,Hd=0s,Hi=0.0M,Rp=0.0M,Hp=0.0M<cr><lf>
```

a	Device address

陕西威瑞仪器仪表有限公司 生产代理销售：实验检测设备 气象科学仪器设备
Tel:029-88186182 Web:www.qixiangzhan.cn Email:sxvery@163.com

R3	Precipitation message query command
Rc	Rain accumulation (M = mm)
Rd	Rain duration (s = s)
Ri	Rain intensity (M = mm/h)
Hc	Hail accumulation (M = hits/cm^2)
Hd	Hail duration (s = s)
Hi	Hail intensity (M = hits/cm^{2}h)
Rp	Rain peak intensity (M = mm/h)
Hp	Hail peak intensity (M = hits/cm^{2}h)
<cr><lf>	Response terminator

7.2.7 Supervisor data message (aR5)

This command requests a supervisor data message containing self-check parameters of the heating system and power supply voltage.

Command format:

```
aR5<cr><lf>
```

a	Device address
R5	Supervisor message query command
<cr><lf>	Command terminator

Example of the response (the parameter set is configurable):

```
0R5,Th=25.9C,Vh=12.0N,Vs=15.2V,Vr=3.475V,Id=HEL___<cr><lf>
```

a	Device address
R5	Supervisor message query command
Th	Heating temperature (C = °C)
Vh	Heating voltage (N = heating is off)
Vs	Supply voltage (V = V)
Vr	3.5 V reference voltage (V = V)
<cr><lf>	Response terminator
Id	Information field

陕西威瑞仪器仪表有限公司 生产代理销售：实验检测设备 气象科学仪器设备
Tel:029-88186182 Web:www.qixiangzhan.cn Email:sxvery@163.com

The content of the parameter `Id` is a text string which you can modify with the Vaisala Configuration Tool. The field can include customer-specific, additional information. For more information on changing the settings, see the Vaisala Configuration Tool online help for the **Info** field in the **Device Settings** window.

More information

- Supervisor message (page 131)

7.2.8 Combined data message (aR)

This command requests all individual messages `aR1`, `aR2`, `aR3`, and `aR5` with one command.

Command format:

```
aR<cr><lf>
```

a	Device address (default = 0)
R	Combined message query command
<cr><lf>	Command terminator

Example response:

```
0R1,Dm=027D,Sm=0.1M<cr><lf>
0R2,Ta=74.6F,Ua=14.7P,Pa=1012.9H<cr><lf>
0R3,Rc=0.10M,Rd=2380s,Ri=0.0M,Hc=0.0M,Hd=0s, Hi=0.0M<cr><lf>
0R5,Th=76.1F,Vh=11.5N,Vs=11.5V,Vr=3.510V,Id=HEL___<cr><lf>
```

7.2.9 Composite data message query (aR0)

This command requests a combined data message with user-configurable set of wind, pressure, temperature, humidity, precipitation, and supervisor data.

Command format:

```
aR0<cr><lf>
```

a	Device address (default = 0)
R0	Composite message query command
<cr><lf>	Command terminator

陕西威瑞仪器仪表有限公司 生产代理销售：实验检测设备 气象科学仪器设备
Tel:029-88186182 Web:www.qixiangzhan.cn Email:sxvery@163.com

Example of the response (you can select the parameters included from the full parameter set of the commands aR1, aR2, aR3, and aR5):

```
0R0,Dx=005D,Sx=2.8M,Ta=23.0C,Ua=30.0P,Pa=1028.2H,
Rc=0.00M,Rd=10s,Th=23.6C<cr><lf>
```

7.2.10 Polling with CRC

Use the same data query commands as in the previous sections but type the first letter of the command in lower case and add a correct three-character CRC before the command terminator. The response also contains a CRC.

Command format for requesting a wind data message with a CRC

```
ar1xxx<cr><lf>
```

a	Device address
r1	Wind message query command
xxx	Three-character CRC for **ar1** command
<cr><lf>	Command terminator

Example of the response (the parameter set is configurable):

```
0r1,Dn=236D,Dm=283D,Dx=031D,Sn=0.0M,Sm=1.0M,Sx=2.2MLFj<cr><lf>
```

The three characters before <cr><lf> are the CRC for the response.



To request the correct CRC for each command, type the command with an arbitrary three-character CRC.

Example of asking the CRC for the wind data message query ar1:

Command format:

```
ar1yyy<cr><lf>
```

a	Device address
r1	Wind message query command
yyy	Arbitrary three-character CRC
<cr><lf>	Command terminator

Response:

陕西威瑞仪器仪表有限公司 生产代理销售：实验检测设备 气象科学仪器设备
Tel:029-88186182 Web:www.qixiangzhan.cn Email:sxvery@163.com

```
atX,Use chksum GoeIU~<cr><lf>
```

a	Device address (default = 0)
tX,Use chksum	Text prompt
Goe	Correct three-character CRC for the **ar1** command
IU~	Three-character CRC for the response message
<cr><lf>	Response terminator

Example of the other data query commands with CRC (when the device address is 0):

Parameter	Description
Pressure, humidity and temperature message query	0r2Gje<cr><lf>
Precipitation query	0r3Kid<cr><lf>
Supervisor query	0r5Kcd<cr><lf>
Combined message query	0rBVT<cr><lf>
Composite data message query	0r0Kld<cr><lf>

In every case the response contains a three-character CRC before the <cr><lf>.

More information

- CRC-16 computation (page 199)
- Sensor and data message settings (page 116)

7.2.11 Automatic mode

When the automatic ASCII protocol is selected, the transmitter sends data messages at user-configurable update intervals.

The message structure is the same as with data query commands **aR1**, **aR2**,**aR3** , and **aR5**. You can choose an individual update interval for each sensor.

Example:

陕西威瑞仪器仪表有限公司 生产代理销售：实验检测设备 气象科学仪器设备
Tel:029-88186182 Web:www.qixiangzhan.cn Email:sxvery@163.com

```
0R1,Dm=027D,Sm=0.1M<cr><lf>

0R2,Ta=74.6F,Ua=14.7P,Pa=1012.9H<cr><lf>

0R3,Rc=0.10M,Rd=2380s,Ri=0.0M,Hc=0.0M,Hd=0s,Hi=0.0M<cr><lf>

0R5,Th=76.1F,Vh=11.5N,Vs=11.5V,Vr=3.510V<cr><lf>
```

Example (with CRC):

```
0r1,Sn=0.1M,Sm=0.1M,Sx=0.1MGOG<cr><lf>

0r2,Ta=22.7C,Ua=55.5P,Pa=1004.7H@Fn<cr><lf>

0r3,Rc=0.00M,Rd=0s,Ri=0.0MIlm<cr><lf>

0r5,Th=25.0C,Vh=10.6#,Vs=10.8V,Vr=3.369VO]T<cr><lf>
```

Stop the automatic output by changing the communication protocol to polled mode (**aXU,M=P**). You can also use polling commands **aR1**, **aR2**, **aR3**, and **aR5** in ASCII automatic protocol for requesting data.

7.2.12 Automatic composite data message (aR0)

When automatic composite data messaging is selected, the transmitter sends composite data messages at user-configurable intervals. The message structure is the same as with the composite data query command **aR0** and contains a user-configurable set of wind, pressure, temperature, humidity, precipitation, and supervisor data.

Example of the response (you can select the parameters included from the full parameter set of the commands aR1, aR2, aR3, and aR5):

```
0R0,Dx=005D,Sx=2.8M,Ta=23.0C,Ua=30.0P,Pa=1028.2H,
Hd=0.00M,Rd=10s,Th=23.6C<cr><lf>
```

For selecting the parameter set in the response message, see Sensor and data message settings (page 116).

Automatic composite data messaging is a concurrent, not an alternate mode to either the polled or automatic modes.

7.3 SDI-12 protocol

There are 2 modes available for providing the functionality of the SDI-12 v1.3 standard.

The native SDI-12 profile (**aXU,M=S**) offers the lowest power consumption as it makes measurements and outputs data only when requested. In this mode all the commands presented in this chapter are available except those for the continuous measurement.

陕西威瑞仪器仪表有限公司 生产代理销售：实验检测设备 气象科学仪器设备
Tel:029-88186182 Web:www.qixiangzhan.cn Email:sxvery@163.com

In the continuous mode (**aXU,M=R**) measurements are made at user-configurable update intervals. The data is outputted on request. In this mode all the commands presented in this chapter are available.

In the native SDI-12 mode (**aXU,M=S**) the transmitter is in idle state most of the time (power consumption < 1 mW). More power is consumed only during the measurements and data transmit requested by the host device.

In particular, wind measurement typically consumes 60 mW average power (with 4 Hz sampling rate), throughout the averaging period. In the continuous mode (**aXU=M,R**) the power consumption is determined by the internal update intervals of the sensors and wind averaging time. These have certain limits, so very long measurement intervals cannot be achieved with this mode. Also the power consumption between the measurements is about three times that of the native mode.

When using SDI-12 in the native mode together with specific data loggers, there is the possibility of intermittent communication problems and rain accumulation measurement problems. If such problems occur, Vaisala recommends using SDI-12 in the continuous mode.

More information

- Sensor and data message settings (page 116)

7.3.1 Address query command (?)

This command queries the address of the device on the bus.

If more than one sensor is connected to the bus, they all respond, causing a bus collision.

Command format:

```
?!
```

?	Address query command
!	Command terminator

Response:

```
a<cr><lf>
```

a	Device address (default = 0)
<cr><lf>	Response terminator

Example (device address 0):

```
?!0<cr><lf>
```


陕西威瑞仪器仪表有限公司 生产代理销售：实验检测设备 气象科学仪器设备
Tel:029-88186182 Web:www.qixiangzhan.cn Email:sxvery@163.com

7.3.2 Acknowledge active command (a)

This command checks that a device responds to a data recorder or another SDI-12 device. It asks device to acknowledge its presence on the SDI-12 bus.

Command format:

```
a!
```

a	Device address
!	Command terminator

Response:

```
a<cr><lf>
```

a	Device address
<cr><lf>	Response terminator

Example:

```
0!0<cr><lf>
```

7.3.3 Change address command (aAb)

This command changes the device address. After the command has been issued and responded to, the sensor is not required to respond to another command for one second to ensure writing the new address to the non-volatile memory.

Command format:

```
aAb!
```

a	Device address
A	Change address command
b	Address to change to
!	Command terminator

Response:

```
b<cr><lf>
```


陕西威瑞仪器仪表有限公司 生产代理销售：实验检测设备 气象科学仪器设备
Tel:029-88186182 Web:www.qixiangzhan.cn Email:sxvery@163.com

b	Device address = the new address (or the original address, if the device is unable to change it)
<cr><lf>	Response terminator

Example (changing address from 0 to 3):

```
0A3!3<cr><lf>
```

7.3.4 Send identification command (aI)

This command queries the device for the SDI-12 compatibility level, model number, firmware version, and serial number.

Command format:

```
aI!
```

a	Device address
I	Send identification command
!	Command terminator

Response:

```
a13ccccccccmmmmmmvvvxxxxxxxx<cr><lf>
```

a	Device address
13	The SDI-12 version number, indicating SDI-12 version compatibility; for example, version 1.3 is encoded as 13
cccccccc	8-character vendor identification Vaisala_
mmmmmm	6 characters specifying the sensor model number
vvv	3 characters specifying the firmware version
xxxxxxxx	8-character serial number
<cr><lf>	Response terminator

Example:

```
0I!013VAISALA_WXT530103Y2630000<cr><lf>
```


陕西威瑞仪器仪表有限公司 生产代理销售：实验检测设备 气象科学仪器设备
Tel:029-88186182 Web:www.qixiangzhan.cn Email:sxvery@163.com

7.3.5 Start measurement command (aM)

This command asks the device to make a measurement. The measured data is not sent automatically. You must request it with the Send data command **aD**.

The host device is not allowed to send any commands to other devices on the bus until the measurement is completed.

When several devices are connected to the same bus and simultaneous measurements from the many devices are needed, use start concurrent measurement **aC** or start concurrent measurement with CRC **aCC**.

Command format:

```
aMx!
```

a	Device address
M	Start measurement command
x	The desired sensor to make the measurement
	1 = Wind
	2 = Temperature, humidity, pressure
	3 = Precipitation
	4 = Analog input
	5 = Supervisor
	If x is left out, the query refers to the combined data message used for requesting data from several sensors with one command.
!	Command terminator

For analog input measurements, the measurement completing time is the bigger one of the **aUI,A** and **aIP,A** values (averaging times for solar radiation, ultrasonic level sensor and Aux.temperature).

The response is sent in two parts.

Part one:

```
atttn<cr><lf>
```

Part two (indicates that the data is ready to be requested):

```
a<cr><lf>
```


陕西威瑞仪器仪表有限公司 生产代理销售：实验检测设备 气象科学仪器设备
Tel:029-88186182 Web:www.qixiangzhan.cn Email:sxvery@163.com

a	Device address
ttt	The measurement completing time in seconds
n	The number of the measured parameters available (maximum number is 9)
<cr><lf>	Response terminator

When the measurement takes less than one second, part two of the response is not sent. This is the case in the precipitation measurement **aM3**.

The maximum number of parameters that can be measured with **aM** and **aMC** commands is nine. If more parameters must be measured, use Start concurrent measurement commands **aC** and **aCC** (for which the maximum number of parameters to be measured is 20).

More information

- Examples of aM, aC and aD commands (page 99)
- Sensor and data message settings (page 116)
- Start concurrent measurement (aC) (page 96)
- Start concurrent measurement with CRC (aCC) (page 97)

7.3.6 Start measurement command with CRC (aMC)

Command format:

```
aMCx!
```

This command asks the device to make a measurement and a three-character CRC is added to the response data strings before <cr><lf>.

To request the measured data, use the Send data command **aD**.

More information

- Send data command (aD) (page 98)

7.3.7 Start concurrent measurement (aC)

Use this command when there are several devices on the same bus and simultaneous measurements are needed from the devices, or if more than 9 measurement parameters are requested from a single device.

The measured data is not sent automatically. You must request it with the Send data command **aD**.

陕西威瑞仪器仪表有限公司 生产代理销售：实验检测设备 气象科学仪器设备
Tel:029-88186182 Web:www.qixiangzhan.cn Email:sxvery@163.com

Command format:

```
aCx!
```

a	Device address
C	Start concurrent measurement command
x	The desired measurement
	1 = Wind
	2 = Temperature, humidity, and pressure
	3 = Precipitation
	4 = Analog input
	5 = Supervisor
	If x is left out, the query refers to combined data message in which the user can request data from several sensors with just one command. See the following example.
!	Command terminator

Response:

```
atttnn<cr><lf>
```

a	Device address
ttt	The measurement completing time in seconds
nn	The number of the measured parameters available (maximum number is 20)
<cr><lf>	Response terminator



For information on changing the message parameters, units and other settings, see Sensor and data message settings (page 116).

7.3.8 Start concurrent measurement with CRC (aCC)

Command format:

```
aCCx!
```


陕西威瑞仪器仪表有限公司 生产代理销售：实验检测设备 气象科学仪器设备
Tel:029-88186182 Web:www.qixiangzhan.cn Email:sxvery@163.com

Use this command when there are several devices on the same bus and simultaneous measurements are needed from the devices but a three-character CRC is added to the response data strings before <cr><lf>.

To request the measured data, use the Send data command **aD**.

7.3.9 Send data command (aD)

Use this command to request the measured data from the device.

Start measurement command indicates the number of parameters available. The number of the parameters that can be included in a single message depends on the number of characters in the data fields. If not all the parameters are retrieved in a single response message, repeat the Send data commands until all the data is obtained.

Command format:

```
aDx!
```

a	Device address
D	Send data command
x	The order of consecutive Send data commands. Make sure the first Send data command is addressed with x=0. If all the parameters are not retrieved, send the next Send data command with x=1 and so on. The maximum value for x is 9.
!	Command terminator

Response:

```
a+<data fields><cr><lf>
```

a	Device address
<data fields>	The measured parameters in selected units, separated with '+' marks (or - marks in case of negative parameter values).
<cr><lf>	Response terminator

aD0 command can also be used to break the measurement in progress started with commands **aM**, **aMC**, **aC**, or **aCC**.

陕西威瑞仪器仪表有限公司 生产代理销售：实验检测设备 气象科学仪器设备
Tel:029-88186182 Web:www.qixiangzhan.cn Email:sxvery@163.com

In SDI-12 v1.3 Continuous measurement mode (**aXU,M=R**) the sensor makes measurements at configurable update intervals. The **aD** command following the **aM**, **aMC**, **aC,** or **aCC** command always returns the latest updated data. Thus in **aXU,M=R** mode issuing consecutive **aD** commands can result in different data strings if the values are updated between the commands.

7.3.10 Examples of aM, aC and aD commands

The parameter order in messages:
Wind (M1): `Dn Dm Dx Sn Sm Sx`
PTU (M2): `Ta Tp Ua Pa`
Rain (M3): `Rc Rd Ri Hc Hd Hi Rp Hp`
Supv (M5): `Th Vh Vs Vr Id`
Comp (M): Wind PTU Rain Supv (parameters in above order)
The order of the parameters is fixed, but you can exclude any parameter from the list when configuring the transmitter.

The parameter order in SDI-12 mode:
Analog in (M4): `Tr Ra Sl Rt Sr`

The device address is 0 in all examples.

Example 1:

Start a wind measurement and request the data (all 6 wind parameters are enabled in the message):

```
0M1!00036<cr><lf>
```

(measurement ready in 3 seconds and 6 parameters available)

```
0<cr><lf>
```

(measurement completed)

```
0D0!0+339+018+030+0.1+0.1+0.1<cr><lf>
```

Example 2:

Start a concurrent pressure, humidity and temperature measurement and request the data:

```
0C2!000503<cr><lf>
```

(measurement ready in 5 seconds and 3 parameters available, for **aC** command device address not sent as a sign of a completed measurement)

陕西威瑞仪器仪表有限公司 生产代理销售：实验检测设备 气象科学仪器设备
Tel:029-88186182 Web:www.qixiangzhan.cn Email:sxvery@163.com

```
0D0!0+23.6+29.5+1009.5<cr><lf>
```

Example 3:

Start a precipitation measurement and request the data:

```
0M3!00006<cr><lf>
```

(6 parameters available immediately, thus the device address is not sent)

```
0D0!0+0.15+20+0.0+0.0+0+0.0<cr><lf>
```

Example 4:

Start a supervisor measurement with CRC and request the data:

```
0MC5!00014<cr><lf>
```

(measurement ready in one second and 4 parameters available)

```
0<cr><lf>
```

(measurement completed)

```
0D0!0+34.3+10.5+10.7+3.366DpD<cr><lf>
```

Example 5:

Start a composite measurement and request the data. The configuration of the parameter set is such that 9 parameters are available. Thus start measurement command **aM** can be used. Due to the 35-character limit in response message, **aD0** returns only 6 parameters. The remaining parameters are retrieved with **aD1**.

```
0M!00059<cr><lf>
```

(measurement ready in 5 seconds and 9 parameters available)

```
0<cr><lf>
```

(measurement completed)

```
0D0!0+340+0.1+23.7+27.9+1009.3+0.15<cr><lf>

0D1!0+0.0+0+0.0<cr><lf>
```

Example 6:

陕西威瑞仪器仪表有限公司 生产代理销售：实验检测设备 气象科学仪器设备
Tel:029-88186182 Web:www.qixiangzhan.cn Email:sxvery@163.com

Start a composite measurement and request the data. The configuration of the parameter set is such that 20 parameters are available. Thus Start concurrent measurement command **aC** is used. Due to the 75-character limit in response message, **aD0** returns only 14 parameters. The remaining parameters are retrieved with **aD1**.

```
0C!000520<cr><lf>
```

(measurement ready in 5 seconds and 20 parameters available, for **aC** command device address not sent as a sign of a completed measurement))

```
0D0!0+069+079+084+0.1+0.6+1.1+21.1+21.7+32.0+1000.3+0.02+20+0.0+0.0<cr><lf>

0D1!0+0+0.0+1.3+0.0+0+77.1<cr><lf>
```

7.3.11 Continuous measurement (aR)

The device can be configured so that all the parameters can be requested instantly with the command **aR** instead of the two-phase request procedure of commands **aM**, **aMC**, **aC**, **aCC**, and **aD**.

In this case the obtained parameter values are those from the latest internal updating. For details on setting update intervals, see Sensor and data message settings (page 116).

For using Continuous measurement commands for all WXT530 series parameters (wind, PTU, precipitation, and supervisor) the select the respective protocol (**aXU,M=R**).
The **M=S** selection requires use of **aM**, **aMC**, **aC**, **aCC**, and **aD** commands, only the precipitation data can be retrieved continuously (using **aR3** command).

Command format:

```
aRx!
```

a	Device address
R	Start continuous measurement command:
x	The desired sensor to make the measurement:
	1 = Wind
	2 = Temperature, humidity, pressure
	3 = Precipitation
	5 = Supervisor
	If x is left out, the query refers to the combined data message used for requesting data from several sensors with just one command.

陕西威瑞仪器仪表有限公司 生产代理销售：实验检测设备 气象科学仪器设备
Tel:029-88186182 Web:www.qixiangzhan.cn Email:sxvery@163.com

!	Command terminator

Response:

```
a+<data fields><cr><lf>
```

a	Device address
<data fields>	The measured parameters in selected units, separated with '+' marks (or '-' marks in case of negative parameter values). The maximum number of parameters to be measured with one request is 15.
<cr><lf>	Response terminator

Examples (device address 0):

```
0R1!0+323+331+351+0.0+0.4+3.0<cr><lf>

0R3!0+0.15+20+0.0+0.0+0+0.0+0.0+0.0<cr><lf>

0R!0+178+288+001+15.5+27.4+38.5+23.9+35.0+1002.1+0.00+0+0.0+23.8<cr><lf>
```

7.3.12 Continuous measurement with CRC (aRC)

Command format:

```
aRCx!
```

The device can be configured so that all the parameters can be requested instantly with the command **aRC** but a three-character CRC is added to the response data strings before <cr><lf>.

Example (device address 0):

```
0RC3!0+0.04+10+14.8+0.0+0+0.0INy
```

7.4 NMEA 0183 v3.0 protocol

This section lists the data query commands and data message formats for the NMEA 0183 v3.0 query and automatic protocols.

A 2-character checksum (CRC) field is transmitted in all data request sentences.

More information

- Sensor and data message settings (page 116)
- CRC-16 computation (page 199)

陕西威瑞仪器仪表有限公司 生产代理销售：实验检测设备 气象科学仪器设备
Tel:029-88186182 Web:www.qixiangzhan.cn Email:sxvery@163.com

7.4.1 Device address (?)

This command queries the address of the device on the bus.

Command format:

```
?<cr><lf>
```

?	Device address query command
<cr><lf>	Command terminator

Response:

```
b<cr><lf>
```

b	Device address (default = 0)
<cr><lf>	Response terminator.

Example:

```
?<cr><lf>
0<cr><lf>
```

If more than one transmitter is connected to the bus, see Connecting several transmitters on same bus (page 168).

7.4.2 Acknowledge active command (a)

This command checks that a device responds to a data recorder or another device. It asks a sensor to acknowledge its presence on the bus.

Command format:

```
a<cr><lf>
```

a	Device address
<cr><lf>	Command terminator

Response:

```
a<cr><lf>
```

a	Device address

陕西威瑞仪器仪表有限公司 生产代理销售：实验检测设备 气象科学仪器设备
Tel:029-88186182 Web:www.qixiangzhan.cn Email:sxvery@163.com

<cr><lf>	Response terminator

Example:

```
0<cr><lf>
0<cr><lf>
```

7.4.3 MWV wind speed and direction query

Use the **MWV** query command to request the wind speed and direction data. To use the **MWV** query, the NMEA Wind formatter parameter in the wind sensor settings must be set to **W**.

The **MWV** command only queries only wind speed and direction average values.

Command:

```
$--WIQ,MWV*hh<cr><lf>
```

$	Start of the message
--	Device identifier of the requester
WI	Device type identifier (WI = weather instrument)
Q	Defines the message as Query
MWV	Wind speed and direction query command
*	Checksum delimiter
hh	Two-character checksum for the query command.
<cr><lf>	Command terminator

Response:

```
$WIMWV,x.x,R,y.y,M,A*hh<cr><lf>
```

$	Start of the message
WI	Talker identifier (WI = weather instrument)
MWV	Wind speed and direction response identifier
x.x	Wind direction value [1)]
R	Wind direction unit (R = relative)
y.y	Wind speed value
M	Wind speed unit (m/s)

陕西威瑞仪器仪表有限公司 生产代理销售：实验检测设备 气象科学仪器设备
Tel:029-88186182 Web:www.qixiangzhan.cn Email:sxvery@163.com

A	Data status: A = valid, V = Invalid
*	Checksum delimiter
hh	Two-character checksum for the response
<cr><lf>	Response terminator

1) *Wind direction is given in relation to the devices north-south axis. An offset value to the measured direction can be set, see Chapter 8.*

The checksum typed in the query depends on the device identifier characters. To find the correct checksum in the WXT530 series transmitters, type any three characters after the **$--WIQ,MWV** command.

Example

If you type the command **$--WIQ,MWVxxx<cr><lf>**(xxx arbitrary characters) , the transmitter responds:

```
$WITXT,01,01,08,Use chksum 2F*72<cr><lf>
```

which indicates that 2F is the correct checksum for the **$--WIQ,MWV** command.

Example

```
$--WIQ,MWV*2F<cr><lf>
```

```
$WIMWV,282,R,0.1,M,A*37<cr><lf>
```

(Wind angle 282 degrees, Wind speed 0.1 m/s)

More information

- XDR transducer measurement query (page 105)

7.4.4 XDR transducer measurement query

The **XDR** query command outputs the data of all sensors except wind.

To request wind data with the **XDR** command, set the NMEA Wind formatter parameter in the wind sensor settings to **T**.

Command:

```
$--WIQ,XDR*hh<cr><lf>
```

$	Start of the message
--	Device identifier of the requester

陕西威瑞仪器仪表有限公司 生产代理销售：实验检测设备 气象科学仪器设备
Tel:029-88186182 Web:www.qixiangzhan.cn Email:sxvery@163.com

WI	Device type identifier (WI = weather instrument)
Q	Defines the message as Query
XDR	Transducer measurement command
*	Checksum delimiter
hh	Two-character checksum for the query command
<cr><lf>	Command terminator

The response includes the parameters activated in the data messages.

The parameter order in the output is as shown in the parameter selection setting field. See Sensor and data message settings (page 116).

Response:

```
$WIXDR,a1,x.x1,u1,c--c1, ... ... ..an,x.xn,un,c--cn*hh<cr><lf>
```

$	Start of the message
WI	Device type identifier (WI = weather instrument)
XDR	Transducer measurement response identifier
a[1)]	Transducer type for the first transducer, see the following transducer table.
x.x[1)]	Measurement data from the first transducer
u[1)]	Units of the first transducer measurement, see the following transducer table.
c--c[1]	First transducer identification (ID). The transmitter's address **aXU,A** is added as a base number to the transducer ID. (command **aXU,A=** [0 ... 9/A ... Z/a ... z]. [1)]
an	Transducer type for the transducer n, see the following transducer table.
x.xn	Measurement data from the transducer n
un	Units of the transducer n measurement, see the following transducer table.
c--cn	Transducer n ID. The transmitter's address **aXU,A** is added as a base number to the Transducer #ID. The address is changeable, see command **aXU,A=** [0 ... 9/A ... Z/a ... z]. [1)]
*	Checksum delimiter
hh	Two-character checksum for the response
<cr><lf>	Response terminator

1) NMEA-format transmits only numbers as transducer IDs. If the transmitter address is given as a letter, it is shown as a number (0 ... 9, A = 10, B = 11, a = 36, b = 37 etc.)

陕西威瑞仪器仪表有限公司 生产代理销售：实验检测设备 气象科学仪器设备
Tel:029-88186182 Web:www.qixiangzhan.cn Email:sxvery@163.com

The checksum to be typed in the query depends on the device identifier characters and can be asked from the WXT530 series, see the following example.

Example:

Typing the command **$--WIQ,XDRxxx<cr><lf>** (xxx arbitrary characters) the transmitter responds

```
$WITXT,01,01,08,Use chksum 2D*72<cr><lf>
```

indicating that 2D is the correct checksum for the **$--WIQ,XDR** command.

If there are several distinct measurements of the same parameter (according to the transducer table), they are assigned different transducer IDs.

For example, minimum, average, and maximum wind speed are measurements of the same parameter (wind speed) so if all 3 are configured to be shown in the XDR message, they get transducer IDs A, A+1, and A+2, respectively, where A is the transmitter address **aXU,A**. The same applies for the wind direction. Temperature, internal temperature, and heating temperature have the same unit, thus they are assigned with transducer IDs A, A+1, and A+2, respectively. Accumulation, duration, and intensity for rainfall and hails are measurements of the same parameters so they get transducer IDs A for rainfall and A+1 for hails. Rain and hail peak intensities are assigned with transducer IDs A+2 and A+3, respectively.

For example, for a transmitter with device address 0 the transducer IDs of all the measurement parameters are as follows.

Table 26 Transducer IDs of measurement parameters

Measurement	Transducer ID	Type
Wind direction min	0	A
Wind direction average	1	A
Wind direction max	2	A
Wind speed min	0	S
Wind speed average	1	S
Wind speed max	2	S
Pressure	0	P
Air temperature	0	C
Internal temperature	1	C
Relative humidity	0	H
Rain accumulation	0	V
Rain duration	0	Z
Rain current intensity	0	R

陕西威瑞仪器仪表有限公司 生产代理销售：实验检测设备 气象科学仪器设备
Tel:029-88186182 Web:www.qixiangzhan.cn Email:sxvery@163.com

Measurement	Transducer ID	Type
Hail accumulation	1	V
Hail duration	1	Z
Hail current intensity	1	R
Rain peak intensity	2	R
Hail peak intensity	3	R
Heating temperature	2	C
Heating voltage	0	U
Supply voltage	1	U
3.5 V reference voltage	2	U
Information field	4	G
Aux. rain (tipping bucket)	1	V
Solar radiation	3	U
Ultrasonic level sensor	4	U
Aux. temperature (Pt1000)	3	C

To ensure correct XDR response, activate either hail accumulation or Aux. rain (tipping bucket), not both at the same time.

Example of the XDR Query (all parameters of each sensor enabled and NMEA wind formatter set to T):

```
$--WIQ,XDR*2D<cr><lf>
```

Example of the response when all the parameters of each sensor are enabled (NMEA wind formatter set to T):

Wind sensor data

```
$WIXDR,A,302,D,0,A,320,D,1,A,330,D,2,S,0.1,M,0,S,0.2,M,1,S,0.2, M,2*57<cr><lf>
```

P, T, and RH data

```
$WIXDR,C,23.3,C,0,C,24.0,C,1,H,50.1,P,0,P,1009.5,H, 0*75<cr><lf>
```

Precipitation data

陕西威瑞仪器仪表有限公司 生产代理销售：实验检测设备 气象科学仪器设备
Tel:029-88186182 Web:www.qixiangzhan.cn Email:sxvery@163.com

```
$WIXDR,V,0.02,M,0,Z,30,s,0,R,2.7,M,0,V,0.0,M,1,Z,0,s,1,R,0.0,M,1,
R,6.3,M,2,R,0.0,M,3*51<cr><lf>
```

Supervisor data

```
$WIXDR,C,20.4,C,2,U,12.0,N,0,U,12.5,V,1,U,3.460,V,2,G,HEL/___,,4*2D
```

The structure of the wind sensor response message:

$	Start of the message
WI	Device type (WI = weather instrument)
XDR	Transducer measurement response identifier
A	Transducer ID 0 type (wind direction)
302	Transducer ID 0 data (min wind direction)
D	Transducer ID 0 units (degrees, min wind direction)
0	Transducer ID for min wind direction
A	Transducer ID 1 type (wind direction)
320	Transducer ID 1 data (average wind direction)
D	Transducer ID 1 units (degrees, average wind direction)
1	Transducer ID for average wind direction
A	Transducer ID 2 type (wind direction)
330	Transducer ID 2 data (max wind direction)
D	Transducer ID 2 units (degrees, max wind direction)
2	Transducer ID for max wind direction
S	Transducer ID 0 type (wind speed)
0.1	Transducer ID 0 data (min wind speed)
M	Transducer ID 0 units (m/s, min wind speed)
0	Transducer ID for min wind speed
S	Transducer ID 1 type (wind speed)
0.2	Transducer ID 1 data (average wind speed)
M	Transducer ID 1 units (m/s, average wind speed)
1	Transducer ID for average wind speed
S	Transducer ID 2 type (wind speed)
0.2	Transducer ID 2 data (max wind speed)

陕西威瑞仪器仪表有限公司 生产代理销售：实验检测设备 气象科学仪器设备
Tel:029-88186182 Web:www.qixiangzhan.cn Email:sxvery@163.com

M	Transducer ID 2 units (m/s, max wind speed)
2	Transducer ID for max wind speed
*	Checksum delimiter
57	Two-character checksum for the response
<cr><lf>	Response terminator

The structure of the pressure, temperature and humidity sensor response message:

$	Start of the message
WI	Device type (WI = weather instrument)
XDR	Transducer measurement response identifier
C	Transducer ID 0 type (Temperature), see Table 27 (page 113)
23.3	Transducer ID 0 data (Temperature)
C	Transducer ID 0 units (C, Temperature)
0	Transducer ID for Temperature
C	Transducer ID 1 type (temperature)
23.3	Transducer ID 1 data (Tp internal temperature)
C	Transducer ID 1 units (C, Tp internal temperature)
1	Transducer ID for Tp internal temperature
H	Transducer ID 0 type (Humidity)
50.1	Transducer ID 0 data (Humidity)
P	Transducer ID 0 units (%, Humidity)
0	Transducer ID for Humidity
P	Transducer ID 0 type (Pressure)
1009.1	Transducer ID 0 data (Pressure)
H	Transducer ID 0 units (hPa, Pressure)
0	Transducer ID for Pressure
*	Checksum delimiter
75	Two-character checksum for the response
<cr><lf>	Response terminator

The structure of the precipitation sensor response message:

$	Start of the message

陕西威瑞仪器仪表有限公司 生产代理销售：实验检测设备 气象科学仪器设备
Tel:029-88186182 Web:www.qixiangzhan.cn Email:sxvery@163.com

WI	Device type (WI = weather instrument)
XDR	Transducer measurement response identifier
V	Transducer ID 0 type (Accumulated rainfall)
0.02	Transducer ID 0 data (Accumulated rainfall)
M	Transducer ID 0 units (mm, Accumulated rainfall)
0	Transducer ID for Accumulated rainfall
Z	Transducer ID 0 type (Rain duration)
30	Transducer ID 0 data (Rain duration)
s	Transducer ID 0 units (s, Rain duration)
0	Transducer ID for Rain duration
R	Transducer ID 0 type (Rain intensity)
2.7	Transducer ID 0 data (Rain intensity)
M	Transducer ID 0 units (mm/h, Rain intensity)
0	Transducer ID for Rain intensity
V	Transducer ID 1 type (Hail accumulation)
0.0	Transducer ID 1 data (Hail accumulation)
M	Transducer ID 1 units (hits/cm^2, Hail accumulation)
1	Transducer ID for Hail accumulation
Z	Transducer ID 1 type (Hail duration)
0	Transducer ID 1 data (Hail duration)
s	Transducer ID 1 units (s, Hail duration)
1	Transducer ID for Hail duration
R	Transducer ID 1 type (Hail intensity)
0.0	Transducer ID 1 data (Hail intensity)
M	Transducer ID 1 units (hits/cm2h, Hail intensity)
1	Transducer ID for Hail intensity
R	Transducer ID 2 type (Rain peak intensity)
6.3	Transducer ID 2 data (Rain peak intensity)
M	Transducer ID 2 units (mm/h, Rain peak intensity)
2	Transducer ID for Rain peak intensity
R	Transducer ID 3 type (Hail peak intensity)
0.0	Transducer ID 3 data (Hail peak intensity)

陕西威瑞仪器仪表有限公司 生产代理销售：实验检测设备 气象科学仪器设备
Tel:029-88186182 Web:www.qixiangzhan.cn Email:sxvery@163.com

M	Transducer ID 3 units (hits/cm^2, Hail peak intensity)
3	Transducer ID for Hail peak intensity
*	Checksum delimiter
51	Two-character checksum for the response
<cr><lf>	Response terminator

The structure of the supervisor response message:

$	Start of the message
WI	Device type (WI = weather instrument)
XDR	Transducer measurement response identifier
C	Transducer ID 2 type (temperature), see Table 27 (page 113)
20.4	Transducer ID 2 data (Heating temperature)
C	Transducer ID 2 units (C, Heating temperature)
2	Transducer ID for Heating temperature
U	Transducer ID 0 type (voltage)
12.0	Transducer ID 0 data (Heating voltage)
V	Transducer ID 0 units, see Table 27 (page 113)
0	Transducer ID for Heating voltage
U	Transducer ID 1 type (Supply voltage)
12.5	Transducer ID 1 data (Supply voltage)
V	Transducer ID 1 units (V, Supply voltage)
1	Transducer ID for Supply voltage
U	Transducer ID 2 type (voltage)
3.460	Transducer ID 2 data (3.5 V reference voltage)
V	Transducer ID 2 units (V, 3.5 V reference voltage)
2	Transducer ID for 3.5 V reference voltage
G	Transducer ID 4 type (generic)
HEL/___	Transducer ID 4 data (info field)
	Transducer ID 4 units (none, null)
4	Transducer ID for generic field
*	Checksum delimiter
2D	Two-character CRC for the response.

陕西威瑞仪器仪表有限公司 生产代理销售：实验检测设备 气象科学仪器设备
Tel:029-88186182 Web:www.qixiangzhan.cn Email:sxvery@163.com

<cr><lf>	Response terminator

Table 27 Transducer table

Transducer	Type	Units Field	Comments
Temperature	C	C = Celsius	
		F = Fahrenheit	
Angular displacement (wind direction)	A	D = degrees	
Wind speed	S	K = km/h M = m/s N = knots	S = mph, non-standardized[1)]
Pressure	P	B = bars P = Pascal	H = hPa I = inHg M = mmHg
Humidity	H	P = Percent	
Accumulated precipitation	V	M = mm I = in H = hits	Non-standardized [1)]
Time (duration)	Z	S = seconds	Non-standardized [1)]
Intensity (flow rate)	R	M = mm/h I = in/h H = hits/h for rainfall M = hits/cm^{2}h I = hits/in^{2}h H = hits/h for hails	Non-standardized [1)]
Voltage	U	V = volts	N = not in use # = Heating is disabled
Generic	G	None (null) P=Percent	

1) Not specified in the NMEA 0183 Standard.

7.4.5 TXT text transmission

The text transmission response format:

陕西威瑞仪器仪表有限公司 生产代理销售：实验检测设备 气象科学仪器设备
Tel:029-88186182 Web:www.qixiangzhan.cn Email:sxvery@163.com

```
$WITXT,xx,xx,xx,c--c*hh<cr><lf>
```

$	Start of the message
WI	Talker identifier (WI = weather instrument)
TXT	Text transmission identifier.
xx	Total number of messages, 01 to 99
xx	Message number.
xx	Text identifier (see text message table)
c---c	Text message (see text message table)
*	Checksum delimiter
hh	Two-character checksum for the query command.
<cr><lf>	Response terminator

Examples:

Wind data request when all the wind parameters were disabled from the wind message:

```
$WItXT,01,01,01,Unable to measure error*6D<cr><lf>
```

Unknown command **0XO!<cr><lf>**:

```
$WITXT,01,01,03,Unknown cmd error*1F
```

Wrong checksum used in **MWV** query command:

```
$WITXT,01,01,08,Use chksum 2F*72
```

7.4.6 Automatic mode

When NMEA 0183 v3.0 automatic protocol is selected, the transmitter sends data messages at user-configurable update intervals. The message format is the same as in the MWV and XDR data queries. The NMEA wind formatter parameter in the wind sensor settings determines whether the wind messages are sent in MWV or XDR format.

You can use ASCII data query commands **aR1**, **aR2**, **aR3**, **aR5**, **aR**, **aR0** and their CRC-versions **ar1**, **ar2**, **ar3**, **ar5**, **ar** and **ar0** also in NMEA 0183 protocol. The responses to these commands are in standard NMEA 0183 format.

More information

- Sensor and data message settings (page 116)

陕西威瑞仪器仪表有限公司 生产代理销售：实验检测设备 气象科学仪器设备
Tel:029-88186182 Web:www.qixiangzhan.cn Email:sxvery@163.com

7.4.7 Automatic composite data message (aR0)

When automatic composite data messaging is selected, the transmitter sends composite data messages at user-configurable intervals. The message structure is the same as with the composite data query command **aR0** and contains a user configurable set of wind, pressure, temperature, humidity, precipitation, and supervisor data.

Example (the parameters included can be chosen from the full parameter set of the commands aR1, aR2, aR3 and aR5):

```
$WIXDR,A,057,D,1,S,0.6,M,1,C,22.6,C,0,H,27.1,P,0,P,1013.6,H,0,V,0.003,I,0,U,12.
0,N,0,U,12.4,V,1*67<cr><lf>
```

Example (rain and voltage parameters removed):

```
$WIXDR,A,054,D,1,S,0.4,M,1,C,22.5,C,0,H,26.3,P,0,P,1013.6,H,0*79<cr><lf>
```

For information on selecting the parameter set in the response message, see Sensor and data message settings (page 116).

Automatic composite data messaging is in concurrent, not alternate mode to either the polled or automatic modes.

陕西威瑞仪器仪表有限公司 生产代理销售：实验检测设备 气象科学仪器设备
Tel:029-88186182 Web:www.qixiangzhan.cn Email:sxvery@163.com

8. Sensor and data message settings

Commands for sensor configuration and data message formatting are available in the following communications protocols:

- ASCII
- NMEA 0183
- SDI-12

You can also modify sensor and data message settings with the Vaisala Configuration Tool.

WXT530 supports also Modbus RTU.

More information

- Vaisala Configuration Tool (page 27)
- Error messaging/text messages (page 151)
- Modbus RTU protocol for WXT530 (page 173)

8.1 Wind sensor

WXT536	WXT535	WXT534	WXT533	WXT532	WXT531
✔			✔	✔	

8.1.1 Checking the settings (aWU)

With the following command you can check the current wind sensor settings.

Command format in ASCII and NMEA 0183:

```
aWU<cr><lf>
```

Command format in SDI-12:

```
aXWU!
```

a	Device address
WU	Wind sensor settings command in ASCII and NMEA 0183
XWU	Wind sensor settings command in SDI-12
<cr><lf>	Command terminator in ASCII and NMEA 0183
!	Command terminator in SDI-12

The response in ASCII and NMEA 0183:

陕西威瑞仪器仪表有限公司 生产代理销售：实验检测设备 气象科学仪器设备
Tel:029-88186182 Web:www.qixiangzhan.cn Email:sxvery@163.com

```
aWU,R=[R],I=[I],A=[A],G=[G],U=[U],D=[D],N=[N],F=[F]<cr><lf>
```

The response in SDI-12:

```
aXWU,R=[R],I=[I],A=[A],G=[G],U=[U],D=[D],N=[N],F=[F]<cr><lf>
```

where [R][I][A][G][U][D][N] are the setting fields.

Example (ASCII and NMEA 0183, device address 0):

```
0WU<cr><lf>

0WU,R=01001000&00100100,I=60,A=10,G=1,U=N,D= -90,N=W,F=4<cr><lf>
```

Example (SDI-12, device address 0):

```
0XWU!0XWU,R=11111100&01001000,I=10,A=3,G=1,U=M,D=0,N=W,F=4<cr><lf>
```

More information

- Configuring wind direction offset (page 48)

8.1.2 Setting fields

Parameter	Description
[R]	Parameter selection. This field consists of 16 bits defining the wind parameters included in the data messages. The bit value 0 disables and the bit value 1 enables the parameter.

Bits 1-8 determine the parameters in the data message obtained with the following commands:

- ASCII: **aR1** and **ar1**
- NMEA 0183: **$--WIQ,XDR*hh**
- SDI-12: **aM1**,**aMC1**, **aC1**, and **aCC1**
- SDI-12 continuous: **aR1** and **aRC1**

Table 28 Wind parameters bits 1-8

Bit	Description
1st bit (most left)	Dn Direction minimum
2nd bit	Dm Direction average
3rd bit	Dx Direction maximum
4th bit	Sn Speed minimum

陕西威瑞仪器仪表有限公司 生产代理销售：实验检测设备 气象科学仪器设备
Tel:029-88186182 Web:www.qixiangzhan.cn Email:sxvery@163.com

Bit	Description
5th bit	Sm Speed average
6th bit	Sx Speed maximum
7th bit	output mode
8th bit	spare
&	delimiter

Bits 9-16 determine the parameters in the data message obtained with the following commands:

- ASCII: **aR0, ar0**
- NMEA 0183: **aR0, ar0**
- SD-12: **aM, aMC, aC, and aCC**
- SDI-12 continuous: **aR** and **aRC**

Table 29 Wind parameters bits 9-16

Bit	Description
9th bit	Dn Wind direction minimum
10th bit	Dm Wind direction average
11th bit	Dx Wind direction maximum
12th bit	Sn Speed minimum
13th bit	Sm Speed average
14th bit	Sx Speed maximum
15th bit	spare
16th bit (most right)	0

Parameter	Description
[I]	Update interval: 1 ... 3600 seconds
[A]	Averaging time: 1 ... 3600 seconds Defines the period over which the wind speed and direction averaging is calculated. Same period is also used for maximum and minimum calculation. See Appendix D Wind Measurement Averaging Method on page 201 for difference in averaging practices when A<I and A>I.
[G]	Wind speed max/min calculation mode: 1 or 3 seconds G =1: Traditional max/min calculation is performed both for speed and direction. G =3: Gust & lull are calculated for wind speed, while direction calculation is as it is with G =1. In the output messages, gust & lull replace the wind speed max/min values (Sx, Sn), respectively.

陕西威瑞仪器仪表有限公司 生产代理销售：实验检测设备 气象科学仪器设备
Tel:029-88186182 Web:www.qixiangzhan.cn Email:sxvery@163.com

Parameter	Description
[U]	Speed unit: M = m/s, K = km/h, S = mph, N = knots
[D]	Direction offset: -180 ... 180°, see Wind Direction Offset on page 51.
[N]	NMEA wind formatter: T = XDR (transducer syntax), W = MWV (wind speed and angle) Defines whether the wind message is sent in XDR or MWV format.
[F]	Sampling rate: 1, 2, or 4 Hz Defines how frequently the wind is measured. Lower sampling rate reduces the power consumption, but it also weakens the measurement representativeness.
<cr><lf>	Response terminator

When using MWV wind messages in NMEA 0183, one of the [R] field bits 1-6 must be 1.

For representative wind values, use an averaging time that is long enough in relation to sampling rate (at least four samples per averaging time).

8.1.3 Changing the settings (aWU)

You can change the following settings:

- Parameters included in the wind data message
- Update interval
- Averaging time
- Wind speed max/min calculation mode
- Speed unit
- Direction offset
- NMEA wind formatter

Change the settings with the following command.

Command format in ASCII and NMEA 0183:

```
aWU,R=x,I=x,A=x,G=x,U=x,D=x,N=x,F=x<cr><lf>
```

Command format in SDI-12:

```
aXWU, R=x,I=x,A=x,G=x,U=x,D=x,N=x,F=x!
```

R, I, A, G, U, D, N, F	Wind sensor setting fields.
x	Value for the setting

陕西威瑞仪器仪表有限公司 生产代理销售：实验检测设备 气象科学仪器设备
Tel:029-88186182 Web:www.qixiangzhan.cn Email:sxvery@163.com

<cr><lf>	Command terminator in ASCII and NMEA 0183
!	Command terminator in SDI-12

If averaging time [A] is greater than update interval [I], it is a multiple of the update interval and at maximum 12 times greater. Example: If I = 5 s, A_{max} = 60 s.

Examples (ASCII and NMEA 0183, device address 0):

You need a 20-second averaging time for wind speed and direction both in wind data and composite data message in every 60 seconds. Wind speed is in knots and wind direction offset +10°.

Changing the measurement interval to 60 seconds:

```
0WU,I=60<cr><lf>

0WU,I=60<cr><lf>
```

Several parameters can be changed with the same command as long as the command length does not exceed 32 characters.

Changing the averaging time to 20 seconds, the wind speed unit to knots, and direction offset to +10°:

```
0WU,A=20,U=N,D=10<cr><lf>

0WU,A=20,U=N,D=10<cr><lf>
```

Changing the wind parameter selection:

```
0WU,R=0100100001001000<cr><lf>

0WU,R=01001000&00100100<cr><lf>
```

Character '&' is not allowed in the command.

The wind message response after the change above:

```
0R1<cr><lf>

0R1,Dm=268D,Sm=1.8N<cr><lf>
```

Example (SDI-12, device address 0):

陕西威瑞仪器仪表有限公司 生产代理销售：实验检测设备 气象科学仪器设备
Tel:029-88186182 Web:www.qixiangzhan.cn Email:sxvery@163.com

Changing the measurement interval to 10 seconds:

```
0XWU,I=10!0<cr><lf>
```

In SDI-12 mode a separate enquiry (**0XWU!**) must be given to check the data.

8.2 Pressure, temperature, and humidity sensors

WXT536	WXT535	WXT534	WXT533	WXT532	WXT531
✔	✔	✔			

8.2.1 Checking the settings (aTU)

Use this command to check the current pressure, temperature, and humidity sensor settings.

Command format in ASCII and NMEA 0183:

```
aTU<cr><lf>
```

Command format in SDI-12:

```
aXTU!
```

Name	Description
a	Device address
TU	Pressure, temperature and humidity sensor settings command in ASCII and NMEA 0183
XTU	Pressure, temperature and humidity sensor settings command in SDI-12
<cr><lf>	Command terminator in ASCII and NMEA 0183
!	Command terminator in SDI-12

The response in ASCII and NMEA 0183:

```
aTU,R=[R],I=[I],P=[P],H=[H]<cr><lf>
```

The response in SDI-12:

```
aXTU,R=[R],I=[I],P=[P],H=[H]<cr><lf>
```

[R] [I] [P] [H] are the setting fields.

陕西威瑞仪器仪表有限公司 生产代理销售：实验检测设备 气象科学仪器设备
Tel:029-88186182 Web:www.qixiangzhan.cn Email:sxvery@163.com

Example (ASCII and NMEA 0183, device address 0)

```
0TU<cr><lf>
0TU,R=11010000&11010000,I=60,P=H,T=C,N=T<cr><lf>
```

Example (SDI-12, device address 0)

```
0XTU!0XTU,R=11010000&11010000,I=60,P=H,T=C,N=T<cr><lf>
```

More information

- Setting fields (page 122)

8.2.2 Setting fields

Parameter	Description
[R]	Parameter selection: This field consists of 16 bits defining the PTU parameters included in the data messages. The bit value 0 disables and the bit value 1 enables the parameter.

Bits 1-8 determine the parameters included in the message obtained with the following commands:

- ASCII: **aR2** and **ar2**
- NMEA 0183: **$--WIQ,XDR*hh**
- SDI-12: **aM2**, **aMC2**, **aC**, and **aCC2**
- SDI-12 continuous: **aR2** and **aRC2**

Table 30 PTU parameters bits 1-8

Bit	Description
1st bit (most left)	Pa Air pressure
2nd bit	Ta Air temperature
3rd bit	Tp Internal temperature [1)]
4th bit	Ua Air humidity
5th bit	Spare
6th bit	Spare
7th bit	Spare

陕西威瑞仪器仪表有限公司 生产代理销售：实验检测设备 气象科学仪器设备
Tel:029-88186182 Web:www.qixiangzhan.cn Email:sxvery@163.com

Bit	Description
8th bit	Spare
&	Delimiter

1) Tp temperature value is used in pressure calculation, it does not express the air temperature.

Bits 9-16 determine the PTU parameters included in the composite data message obtained with the following commands:

- ASCII: **aR0** and **ar0**
- NMEA 0183:**aR0**, **ar0**
- SDI-12: **aM**, **aMC**, **aC**, and **aCC**
- SDI-12 continuous: **aR** and **aRC**

Table 31 PTU parameters bits 9-16

Bit	Description
9th bit	Pa Air pressure
10th bit	Ta Air temperature
11th bit	Tp Internal temperature1
12th bit	Ua Air humidity
13th bit	Spare
14th bit	Spare
15th bit	Spare
16th bit	Spare

Parameter	Description
[I]	Update interval: 1 ... 3600 seconds
[P]	Pressure unit: H = hPa, P = Pascal, B = bar, M = mmHg, I = inHg
[T]	Temperature unit: C = Celsius, F = Fahrenheit
[N]	NMEA formatter: T = XDR (transducer syntax) D =MDA Defines whether the wind message is sent in XDR or MDA format.
<cr><lf>	Response terminator

陕西威瑞仪器仪表有限公司 生产代理销售：实验检测设备 气象科学仪器设备
Tel:029-88186182 Web:www.qixiangzhan.cn Email:sxvery@163.com

8.2.3 Changing the settings (aTU)

You can change the following settings:

- Parameters included in the data message
- Update interval
- Pressure unit
- Temperature unit

Change the setting with the following command.

Command format in ASCII and NMEA 0183:

```
aTU,R=x,I=x,P=x,T=x<cr><lf>
```

Command format in SDI-12:

```
aXTU,R=x,I=x,P=x,T=x!
```

R, I, P, T	The pressure, temperature and humidity sensor setting fields.
x	Value for the setting
<cr><lf>	Command terminator in ASCII and NMEA 0183
!	Command terminator in SDI-12

Example

Selecting how the NMEA message operates: **0TU,N=**

NMEA PTU formatting settings:

PTU XDR mode: **aTU,N=T**

PTU MDA mode: **aTU,N=D**

An example of MDA:

```
$WIMDA,29.88,I,1.0120,B,22.5,C,,C,31.5,,,C,,T,,M,,N,,M*3F
```

Examples (ASCII and NMEA 0183, device address 0)

You need the temperature and humidity data to be available in every 30 seconds

Changing the parameter selection:

```
0TU,R=01010000010100000<cr><lf>

0TU,R=01010000&01010000<cr><lf>
```


陕西威瑞仪器仪表有限公司 生产代理销售：实验检测设备 气象科学仪器设备
Tel:029-88186182 Web:www.qixiangzhan.cn Email:sxvery@163.com

Character '&' is not allowed in the command.

Changing the update interval:

```
0TU,I=30<cr><lf>

0TU,I=30<cr><lf>
```

The response after the change:

```
0R2<cr><lf>

0R2,Ta=23.9C,Ua=26.7P<cr><lf>
```

Example (SDI-12, device address 0)

Changing the temperature unit to Fahrenheit:

```
0XTU,U=F!0<cr><lf>
```

To check the data content in SDI-12 mode, you must type **0XTU!**.

8.3 Precipitation sensor

WXT536	WXT535	WXT534	WXT533	WXT532	WXT531
✔	✔		✔		✔

8.3.1 Checking the settings (aRU)

Use this command to check the current precipitation sensor settings.

Command format in ASCII and NMEA 0183:

```
aRU<cr><lf>
```

Command format in SDI-12:

```
aXRU!
```

a	Device address
RU	Precipitation sensor settings command in ASCII and NMEA 0183

陕西威瑞仪器仪表有限公司 生产代理销售：实验检测设备 气象科学仪器设备
Tel:029-88186182 Web:www.qixiangzhan.cn Email:sxvery@163.com

XRU	Precipitation sensor settings command in SDI-12
<cr><lf>	Command terminator in ASCII and NMEA 0183
!	Command terminator in SDI-12

The response in ASCII and NMEA 0183:

```
aRU,R=[R],I=[I],U=[U],S=[S],M=[M],Z=[Z],X=[X],Y=[Y]<cr> <lf>
```

The response in SDI-12:

```
aXRU,R=[R],I=[I],U=[U],S=[S],M=[M],Z=[Z],X=[X],Y=[Y]<cr><lf>
```

where [R][I][U][S][M][Z][X][Y] are the setting fields.

Example (ASCII and NMEA 0183, device address 0):

```
0RU<cr><lf>

0RU,R=11111100&10000000,I=60,U=M,S=M,M=R,Z=M,X=100, Y=100<cr><lf>
```

Example (SDI-12, device address 0):

```
0RU!0RU,R=11111100&10000000,I=60,U=M,S=M,M=R, Z=M,X=100,Y=100<cr><lf>
```

8.3.2 Setting fields

Parameter	Description
[R]	Parameter selection: This field consists of 16 bits defining the precipitation parameters included in the data messages. The bit value 0 disables and the bit value 1 enables the parameter.

Bits 1-8 determine the parameters included in the messages obtained with the following commands:

- ASCII: **aR3** and **ar3**
- NMEA 0183: **$--WIQ,XDR*hh**
- SDI-12: **aM3**, **aMC3**, **aC3**, **aCC3**
- SDI-12 continuous: **aR3** and **ar3**

Table 32 Precipitation parameters Bits 1-8

Bit	Description
1st bit (most left)	Rc Rain amount

陕西威瑞仪器仪表有限公司 生产代理销售：实验检测设备 气象科学仪器设备
Tel:029-88186182 Web:www.qixiangzhan.cn Email:sxvery@163.com

Bit	Description
2nd bit	Rd Rain duration
3rd bit	Ri Rain intensity
4th bit	Hc Hail amount
5th bit	Hd Hail duration
6th bit	Hi Hail intensity
7th bit	Rp Rain peak
8th bit	Hp Hail peak
&	Delimiter

Bits 9-16 determine the precipitation parameters included in the composite data messages obtained with the following commands:

- ASCII:
- NMEA 0183: **aR0**, **ar0**
- SDI-12: **aM**, **aMC**, **aC**, **aCC**
- SDI-12 continuous: **aR** and **aRC**

Table 33 Precipitation parameters Bits 9-16

Bit	Description
9th bit	Rc Rain amount
10th bit	Rd Rain duration
11th bit	Ri Rain intensity
12th bit	Hc Hail amount
13th bit	Hd Hail duration
14th bit	Hi Hail intensity
15th bit	Rp Rain peak
16th bit (most right)	Hp Hail peak

Parameter	Description
[I]	Update interval: 1 ... 3600 seconds. This interval is valid only if the **[M]** field is = T. **CAUTION!** The default value is 60 s. Smaller values are not recommended.

陕西威瑞仪器仪表有限公司 生产代理销售：实验检测设备 气象科学仪器设备
Tel:029-88186182 Web:www.qixiangzhan.cn Email:sxvery@163.com

Parameter	Description
[U]	Precipitation units:
	M = metric (accumulated rainfall in mm, Rain duration in s, Rain intensity in mm/h)
	I = imperial (the corresponding parameters in units in, s, in/h)
[S]	Hail units:
	M = metric (accumulated hailfall in hits/cm2, Hail event duration in s, Hail intensity in hits/cm2h)
	I = imperial (the corresponding parameters in units hits/in2, s, hits/in2h), H = hits (hits, s, hits/h) Changing the unit resets the precipitation counter.
[M]	Autosend mode: R = precipitation on/off, C = tipping bucket, T = time based
	R = precipitation on/off: The transmitter sends a precipitation message 10 seconds after the first recognition of precipitation. Rain duration Rd increases in 10 s steps. Precipitation has ended when Ri = 0. This mode is used for indication of the start and the end of the precipitation.
	C = tipping bucket: The transmitter sends a precipitation message at each unit increment (0.1 mm/0.01 in). This simulates conventional tipping bucket method. Do not use the autosend mode tipping bucket in polled protocols as it decreases the resolution of the output (quantized to tipping bucket tips).
	T = time based: Transmitter sends a precipitation message in the intervals defined in the [I] field.
[Z]	Counter reset: M = manual, A = automatic, L = limit, Y = immediate
	M = manual reset mode: The precipitation counter is reset with **aXZRU** command. See Precipitation counter reset (aXZRU) (page 80). The counter saturates to maximum value (655.35 mm / 65.535 in).
	A = automatic reset mode: The counts are reset after each precipitation message whether in automatic mode or when polled.
	L = overflow reset mode. The rain counter or hail counter is reset, when it reaches the predefined limit. The overflow limits (x, y) are defined with the commands **aRU,X=x** for rain counter and **aRU,Y=y** for hail counter.
	Y = immediate reset: The counts are reset immediately after receiving the command.
[X]	Rain accumulation limit: 100 ... 65535. Sets the rain accumulation counter resetting limit. When the value exceeds the limit, the counter is reset to zero. If the precipitation unit **aRU,U=x** is metric, the limit corresponds the range between 1.00 ... 655.35 mm. If the precipitation unit is imperial, the equivalent range varies between 0.100 ... 65.535 in. To enable this feature, set the counter reset to **aRU,Z=L** (overflow reset mode).

陕西威瑞仪器仪表有限公司 生产代理销售：实验检测设备 气象科学仪器设备
Tel:029-88186182 Web:www.qixiangzhan.cn Email:sxvery@163.com

Parameter	Description
[Y]	Hail accumulation limit: 100 ... 65535. Sets the hail accumulation counter resetting limit. When the value exceeds the limit, the counter is reset to zero. If the hail unit **aRU,S=x** is metric, the limit corresponds the range between 10.0 ... 6553.5 hits/cm2. If the unit is imperial, the equivalent range varies between 100 ... 65535 hits/in2. If the unit is hits, the limit matches directly to the amount of hits: 100 ... 65535 hits. To enable this feature, set the counter reset to **aRU,Z=L** (overflow reset mode).
<cr><lf>	Response terminator

The autosend mode parameter is significant only in ASCII automatic (+CRC) and NMEA 0183 automatic protocols.

Changing the counter reset mode or precipitation/surface hits units also resets precipitation counter and intensity parameters.
The field [Z] defines how the counters are reset. Use **L** to enable the rain overflow reset mode. Now the rain accumulation limit feature (X and Y) becomes particularly useful for systems using an analog interface adapter. Thus, the data loggers have no serial interface that would enable them to reset the rain counters.

8.3.3 Changing the settings (aRU)

You can change the following settings:

- Parameters included in the precipitation data message
- Update interval in the time based autosend mode
- Precipitation units
- Hail units
- Autosend mode
- Counter reset
- Rain accumulation limit
- Hail accumulation limit

Change the setting with the following command. Select the correct value/letter for the setting fields.

Command format in ASCII and NMEA 0183:

```
aRU,R=x,I=x,U=x,S=x,M=x,Z=x,X=x,Y=x<cr><lf>
```

Command format in SDI-12:

```
aXRU,R=x,I=x,U=x,S=x,M=x,Z=x,X=x,Y=x!
```


陕西威瑞仪器仪表有限公司 生产代理销售：实验检测设备 气象科学仪器设备
Tel:029-88186182 Web:www.qixiangzhan.cn Email:sxvery@163.com

`R, I, U, S, M, Z, X, Y`	Precipitation sensor setting fields
`x`	Input value for the setting
`<cr><lf>`	Command terminator in ASCII and NMEA 0183
`!`	Command terminator in SDI-12

Examples (ASCII and NMEA 0183):

Changing the precipitation units to imperial:

```
0RU,U=I<cr><lf>

0RU,U=I<cr><lf>
```

Changing the autosend mode to the tipping bucket mode:

```
0RU,M=C<cr><lf>

0RU,M=C<cr><lf>
```

Making the Rain amount `Rc` and Rain intensity `Ri` available both in the precipitation message and composite data message:

```
0RU,R=10100000010100000<cr><lf>

0RU,R=10100000&10100000<cr><lf>
```



For more information about composite message fields, see Composite data message (aR0) (page 134).

The response after the change:

```
0R3<cr><lf>

0R3,Rc=0.00M,Ri=0.0M<cr><lf>
```

Example (SDI-12, device address 0):

Changing the counter reset mode (resets the precipitation counters):

```
0XRU,Z=M!0<cr><lf>
```

More information

- Setting fields (page 126)
- Composite data message (aR0) (page 134)

陕西威瑞仪器仪表有限公司 生产代理销售：实验检测设备 气象科学仪器设备
Tel:029-88186182 Web:www.qixiangzhan.cn Email:sxvery@163.com

8.4 Supervisor message

8.4.1 Checking the settings (aSU)

Use this command to check the current supervisor settings.

Command format in ASCII and NMEA 0183:

```
aSU<cr><lf>
```

Command format in SDI-12:

```
aXSU!
```

a	Device address
SU	Supervisor settings command in ASCII and NMEA 0183
XSU	Supervisor settings command in SDI-12
<cr><lf>	Command terminator in ASCII and NMEA 0183
!	Command terminator in SDI-12

The response in ASCII and NMEA 0183:

```
aSU,R=[R],I=[I],S=[S],H=[Y]<cr><lf>
```

The response in SDI-12:

```
aXSU,R=[R],I=[I],S=[S],H=[Y]<cr><lf>
```

8.4.2 Setting fields

Parameter	Description
[R]	Parameter selection: This field consists of 16 bits defining the supervisor parameters included in the data messages. The bit value 0 disables and the bit value 1 enables the parameter.

Bits 1-8 determine the parameters included in the message obtained with the following commands:

- ASCII: **aR5** and **ar5**
- NMEA 0183: **$--WIQ,XDR*hh**
- SDI-12: **aM5**, **aMC5**, **aC5**, and **aCC5**
- SDI-12 continuous: **aR5** and **aRC5**

陕西威瑞仪器仪表有限公司 生产代理销售：实验检测设备 气象科学仪器设备
Tel:029-88186182 Web:www.qixiangzhan.cn Email:sxvery@163.com

Table 34 Supervisor parameters bits 1-8

Bit	Description
1st bit (most left)	Th Heating temperature
2nd bit	Vh Heating voltage
3rd bit	Vs Supply voltage
4th bit	Vr 3.5 V reference voltage
5th bit	Id Information field
6th bit	Spare
7th bit	Spare
8th bit	Spare
&	Delimiter

Bits 9-16 determine the supervisor parameters included in the composite data message obtained with the following commands:

- ASCII: **aR0** and **ar0**
- NMEA 0183: **aR0**and **ar0**
- SDI-12: **aM**, **aMC**, **aC**, and **aCC**
- SDI-12 continuous: **aR** and **aRC**

Table 35 Supervisor parameters bits 9-16

Bit	Description
9th bit	Th Heating temperature
10th bit	Vh Heating voltage
11th bit	Vs Supply voltage
12th bit	Vr 3.5 V reference voltage
13th bit	Id Information field
14th bit	Spare
15th bit	Spare
16th bit (most right)	Spare

Parameter	Description
[I]	Update interval: 1 ... 3600 seconds. When the heating is enabled the update interval is forced to 15 seconds.
[S]	Error messaging: Y = enabled, N = disabled

陕西威瑞仪器仪表有限公司 生产代理销售：实验检测设备 气象科学仪器设备
Tel:029-88186182 Web:www.qixiangzhan.cn Email:sxvery@163.com

Parameter	Description
[H]	Heating control enable: Y = enabled, N = disabled Heating enabled: The control between full and half heating power is on as described in Heating on page 34. Heating disabled: Heating is off in all conditions.
<cr><lf>	Response terminator

Example (ASCII and NMEA 0183, device address 0):

```
0SU<cr><lf>

0SU,R=11110000&11000000,I=15,S=Y,H=Y<cr><lf>
```

Example (SDI-12, device address 0):

```
0XSU!0XSU,R=11110000&11000000,I=15,S=Y,H=Y<cr><lf>
```

8.4.3 Changing the settings (aSU)

You can change the following settings:

- Parameters included in the supervisor data message
- Update interval
- Error messaging on/off
- Heating control

Change the setting with the following command. Select the correct value/letter for the setting fields.

Command format in ASCII and NMEA 0183:

```
aSU,R=x,I=x,S=x,H=x<cr><lf>
```

Command format in SDI-12;

```
aXSU,R=x,I=x,S=x,H=x!
```

R, I, S, H	The supervisor setting fields
x	Value for the setting
<cr><lf>	Command terminator in ASCII and NMEA 0183
!	Command terminator in SDI-12

Example (ASCII and NMEA 0183, device address 0):

Disabling the heating and error messaging:

陕西威瑞仪器仪表有限公司 生产代理销售：实验检测设备 气象科学仪器设备
Tel:029-88186182 Web:www.qixiangzhan.cn Email:sxvery@163.com

```
0SU,S=N,H=N<cr><lf>

0SU,S=N,H=N<cr><lf>
```

Example (SDI-12, device address 0):

Changing the update interval to 10 seconds:

```
0XSU,I=10!0<cr><lf>
```

In SDI-12 mode a separate enquiry (**0XSU!**) must be given to check the data content.

8.5 Composite data message (aR0)

You can define the parameters to be included in the composite data message **aR0** in the parameter selection fields of each parameter (**aWU,R**, **aTU,R**, **aRU,R**, and **aSU,R**).

When changing the bits 9-16 of the parameter selection of any sensor, you can shorten the command by replacing the bits 1-8 with a single '&' character, see the examples.

Example (ASCII and NMEA 0183, device address 0):

To format a composite data message with average wind direction, average wind speed, temperature, humidity and pressure data when the original composite data message contains following data: maximum wind direction, maximum wind speed, temperature, humidity, pressure, accumulated rainfall, supply voltage and heating voltage:

```
0R0<cr><lf>

0R0,Dx=009D,Sx=0.2M,Ta=23.3C,Ua=37.5P,Pa=996.8H,Rc=0.000I,Vs=12.0V,Vh=0.0N<cr><
lf>
```

Replace the maximum wind direction (**Dx**) and speed (**Sx**) with average wind direction (**Dm**) and average wind speed (**Sm**):

```
0WU,R=&01001000<cr><lf>

0WU,R=11110000&01001000<cr><lf>
```

Remove the heating voltage (**Vh**) and temperature (**Th**) data from the composite data message, and include the information field (**Id**):

```
0SU,R=&00001000<cr><lf>

0SU,R=11110000&00001000<cr><lf>
```

Remove the accumulated rainfall (**Rc**) from the composite data message:

陕西威瑞仪器仪表有限公司 生产代理销售：实验检测设备 气象科学仪器设备
Tel:029-88186182 Web:www.qixiangzhan.cn Email:sxvery@163.com

```
0RU,R=&00000000<cr><lf>

0RU,R=11111100&00000000<cr><lf>
```

The final composite data message query and response in ASCII:

```
0R0<cr><lf>

0R0,Dm=009D,Sm=0.2M,Ta=23.3C,Ua=37.5P,Pa=996.8H,Id=HEL___<cr><lf>
```

8.6 Analog input

The following figure shows the pins of the analog input connectors.

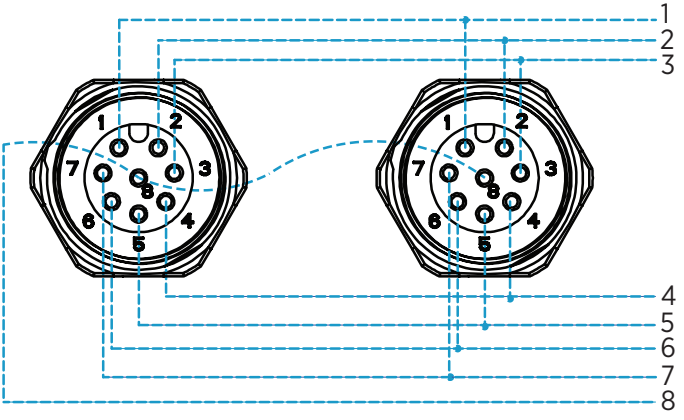

Figure 25 Analog input connector pins

Table 36 Analog input signals

Signal name	M12 pin	Description	Use example
PTI+	1	Pt1000 measuring current	Pt1000 temperature sensor Current feed
PT+	2	Pt1000 input+	Pt1000 temperature sensor. Sense+
PT-	3	Pt1000 input-	Pt1000 temperature sensor Sense-

陕西威瑞仪器仪表有限公司 生产代理销售：实验检测设备 气象科学仪器设备
Tel:029-88186182 Web:www.qixiangzhan.cn Email:sxvery@163.com

Signal name	M12 pin	Description	Use example
AGND	4	Analog ground	Common ground for level, tipping bucket, and Pt1000
TIP IN	5	Pulse counting input (pulled up with resistor)	Tipping bucket type rain sensor
SR+	6	Differential 0 ... 25 mV input, +	Pyranometer
SR-	7	Differential 0 ... 25 mV input, -	Pyranometer
WS IN	8	0 ... 2.5/0 ... 5/0 ... 10 V input	Level sensor

The following figure shows the analog input settings in Vaisala Configuration Tool.

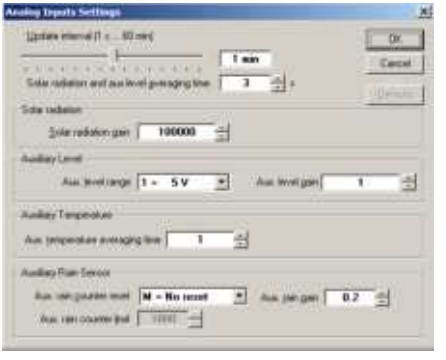

Figure 26 Analog input settings in Vaisala Configuration Tool

Table 37 Analog input setting definitions

Setting	Default value	Definition
Update interval	1 min	Defines analog input measurement interval. A shorter interval and a longer averaging time increase power consumption.
Solar radiation and aux. level averaging time	3 s	Defines averaging times for solar radiation and ultrasonic level sensor voltage measurement.
Solar radiation gain	100000	Taken from solar radiation sensor calibration documents provided with the sensor. For example for sensitivity 19.71 µV/W/m^2 gain is 1 / 0.00001971 V/W/m^2 = 50736
Aux. level range	0 ... 5 V	Selects voltage measurement range. Available ranges: 0 ... 2.5 V, 0 ... 5 V, 0 ... 10 V

陕西威瑞仪器仪表有限公司 生产代理销售：实验检测设备 气象科学仪器设备
Tel:029-88186182 Web:www.qixiangzhan.cn Email:sxvery@163.com

Setting	Default value	Definition
Aux. level gain	1	Defines gain factor for auxiliary level voltage measurement. Gain can be used to convert voltage reading directly to distance/height.
Aux. temperature averaging time	1 s	Defines Pt1000 temperature sensor measurement averaging time. To minimize sensor self-heating effect, make it short.
Aux. rain counter reset	M = No reset	Defines how to reset the rain counter. M means that you have to manually reset the counter.
Aux. rain gain	0.2 mm	Comes from the rain sensor tipping bucket size. It means pulses / user rain unit (for example, mm). If the aux. sensor has 5 pulses per mm of rain, and the user sets the gain to 0.2, the rain value reported by the transmitter is in mm.
Aux. rain counter limit		Used only when L = based on limit is selected. Resets the rain counter when it reaches this value. The same unit as the gain G has.

WXT530 series settings:

```
0IU,R=11111000&11111000,I=60,A=3.0
0IB,G=100000.0
0IS,M=1,G=1.0
0IP,A=1.0
0IA,M=M,G=0.2
```

8.6.1 Enabling and disabling analog input

If the analog input option is selected for WXT536, all analog inputs are enabled by default.

You can enable and disable analog input with the **aIU,R=** command.

For example, Pt1000 temperature enabled, all other disabled:

```
aIU,R=1000000010000000
```

To apply the new setting, reset the transmitter.

More information

- Enabling or disabling analog output (page 144)

陕西威瑞仪器仪表有限公司 生产代理销售：实验检测设备 气象科学仪器设备
Tel:029-88186182 Web:www.qixiangzhan.cn Email:sxvery@163.com

8.6.2 Common sensor settings (aIU)

Update interval [I]

The update interval in seconds. This parameter defines the measurement interval for analog inputs:

- Pt1000
- Solar radiation
- Aux rain

The range: 0.5 ... 3600.

8.6.3 Aux input averaging time [A]

The Aux input averaging time in seconds. This parameter defines the averaging time for ultrasonic level sensor and solar radiation measurement. Pt1000 and the tipping bucket are not affected by this setting.

Make sure the averaging time is smaller than the update interval [`I`]. The smallest value 0.25 s means single measurement. A longer averaging time can decrease noise. A shorter averaging time gives a slightly smaller current consumption.

8.6.4 Parameter selection [R]

[`R`] defines the active measurements.

Table 38 aIU setting fields [R]

Normal message	
1st bit (most left)	Tr pt1000 temperature
2nd bit	Ra Aux rain amount
3rd bit	Sl ultrasonic level sensor
4th bit	Sr solar radiation
5th bit	Rt pt1000 resistance
6th bit	
7th bit	Analog output mode
8th bit	
&	delimiter
Composite message	
9th bit	Tr pt1000 temperature
10th bit	Ra Aux rain amount
11th bit	Sl Ultrasonic level sensor

陕西威瑞仪器仪表有限公司 生产代理销售：实验检测设备 气象科学仪器设备
Tel:029-88186182 Web:www.qixiangzhan.cn Email:sxvery@163.com

12th bit	Sr solar radiation
13th bit	Rt pt1000 resistance
14th bit	0
15th bit	0
16th bit (most right)	0

8.6.5 Getting data messages

You can get data messages with the **aR4** command.

An example response:

```
0R4,Tr=111.3C,Ra=0.0M,Sl=0.001208V,Sr=0.000029V
```

`Tr`	Pt1000 (C = Celsius, F = Fahrenheit)
`Ra`	Aux rain accumulation (M = mm)
`Sl`	Ultrasonic level sensor (V = volts at input * gain)
`Sr`	Solar radiation (V = volts at input * gain)

You can set the gain for `Sr` and `Sl`.

8.6.6 Aux rain sensor settings [alA]

Gain [G]

[G] defines the pulses per rain unit, for example in mm.

If the Aux sensor has 10 pulses per a millimeter of rain and the user sets the gain to 1/10, the transmitter reports the rain value in mm.

The range: 0.000 000 001 ... 1 000 000

Reset mode [M]

`M` defines the reset mode.

Parameter	Description
`M`	No reset
`L`	Based on limit
`A`	Automatic (aux rain message sent)

陕西威瑞仪器仪表有限公司 生产代理销售：实验检测设备 气象科学仪器设备
Tel:029-88186182 Web:www.qixiangzhan.cn Email:sxvery@163.com

The initial tip counter overflows if it reaches 65536 and it starts from 0. If the tipping bucket resolution is 0.2 mm per tip, the gain is 0.2, and the maximum rain amount before overflow is 65536 × 0.2 = 13107 mm.

Limit [L]

[L] defines the reset limit. The rain counter resets when it reaches this value. The unit is the same as in gain [G].

The range: 0.000 000 001 ... 1 000 000

Parameter selection [aIU,R = bit 2 and bit 10]

Bits 7 and 14 enable normal and composite message for aux rain accumulation. You can select the parameter with the **aIU** command. The maximum value for the rain counter is 65535 * gain.

8.6.7 Solar radiation sensor settings [aIB]

Gain

[G] defines the volts / user unit, for example, µV/W/m^2. WXT reports the voltage at solar radiation input multiplied with gain [G].

For example, if the solar radiation sensor has sensitivity 5 µV/W/m^2 and you set the gain [G] to 1/ µV = 200 000, the solar radiation value reported by WXT is in W/m^2. WXT reports the value always with six decimals.

The range: 0.000 000 001 ... 1 000 000

Parameter selection [aIU,R= bit 3 and bit 11]

The bits enable normal and composite messages. You can select the parameters with the **aIU** command.

8.6.8 Ultrasonic level sensor settings [aIS]

Gain [G]

[G] defines the volts / user unit, for example, V/m. WXT reports the voltage at input multiplied with the gain [G].

For example, if the sensor has gain 2 V/meter and the user sets the gain [G] to 0.5, the value reported by WXT is in meters. WXT reports the value with 6 decimals.

The range: 0.000 000 001 ... 1 000 000

陕西威瑞仪器仪表有限公司 生产代理销售：实验检测设备 气象科学仪器设备
Tel:029-88186182 Web:www.qixiangzhan.cn Email:sxvery@163.com

Parameter selection [aIU,R= (bit 3 and bit 11)]

The bits enable normal and composite messages. You can select the parameters with the **aIU** command.

8.6.9 Aux.temperature sensor settings [aIP]

You can set the temperature settings for the temperature unit with the **aTU,U=** command.

Averaging time [A]

The averaging time in seconds, resolution 0.5 s. You can set a short averaging time (0.5 s) to reduce the Pt1000 sensor self-heating. The message interval defines how often the measurement starts. The measurement is performed every 0.5 s for averaging time.

The range: 0.5 ... 3600

Parameter selection [aIU,R= (bit 1 and bit 9)]

The bits 7 and 14 enable normal and composite message for Aux rain accumulation. You can select the parameters with the **aIU** command.

8.6.10 Parameter order for SDI-12 mode

The parameter order for SDI-12 mode is:

Analog in (M4): `Tr Ra Sl Rt Sr`

8.7 Analog output

You can change the analog output type and scaling of WXT532.

WXT532 provides the following analog outputs:

- AOUT1 for wind speed data
- AOUT2 for wind direction data

The analog output value is updated based on **aWU,I=** settings. Wind measurement uses **aWU** settings, such as Averaging Time.

More information

- Analog output scaling (page 142)
- Power management (page 53)

8.7.1 Analog output operation

You can order WXT532 with either 4 ... 20 mA scaling or 0 ... 20 mA scaling.

You can scale the output with the command **aSU**.

陕西威瑞仪器仪表有限公司 生产代理销售：实验检测设备 气象科学仪器设备
Tel:029-88186182 Web:www.qixiangzhan.cn Email:sxvery@163.com

Example commands to set 4 ... 20 mA operation:

Parameter	Description
Wind speed gain	**aSU,a=0.333333<cr><lf>**
Wind speed offset	**aSU,b=4 <cr><lf>**
Wind speed minimum	**aSU,c=0<cr><lf>**
Wind speed maximum	**aSU,d=22<cr><lf>**
WS error indication	**aSU,e=2<cr><lf>**
Wind direction gain	**aSU,f=0.044444<cr><lf>**
Wind direction offset	**aSU,g=4<cr><lf>**
WD minimum	**aSU,h=0<cr><lf>**
WD maximum	**aSU,j=22<cr><lf>**
WD error indication	**aSU,k=2<cr><lf>**

The output o in mA is o=i* gain + offset. o is clamped between min and max. If wind measurement fails, the output value is err.

8.7.2 Analog output scaling

You can specify the transfer function between measured values and output analog values. You can select the analog output gain and offset used in the transfer function.

The factory default settings for the different analog output modes are displayed in the following table.

Table 39 Analog output scaling

Parameter	4 ... 20 mA option (max. 60 m/s)	0 ... 20 mA option (max. 60 m/s)	Command example (4 ... 20 mA)
Aout1, wind speed gain	0.266667 mA / m/s	0.333333 mA / m/s	**aSU,a=0.266667<cr><lf>**
Aout1, wind speed offset	4 mA	0 mA	**aSU,b=4<cr><lf>**
Aout1, wind speed minimum	0 mA	0 mA	**aSU,c=0<cr><lf>**
Aout1, wind speed maximum	22 mA	22 mA	**aSU,d=22<cr><lf>**
Aout1, wind speed error indication	2 mA	22 mA	**aSU,e=2<cr><lf>**
Aout2, wind direction gain	0.044444 mA / °	0.055556 mA / °	**aSU,f=0.044444<cr><lf>**

陕西威瑞仪器仪表有限公司 生产代理销售：实验检测设备 气象科学仪器设备
Tel:029-88186182 Web:www.qixiangzhan.cn Email:sxvery@163.com

Parameter	4 ... 20 mA option (max. 60 m/s)	0 ... 20 mA option (max. 60 m/s)	Command example (4 ... 20 mA)
Aout2, wind direction offset	4 mA	0 mA	**aSU,g=4<cr><lf>**
Aout2, wind direction minimum	0 mA	0 mA	**aSU,h=0<cr><lf>**
Aout2, wind direction maximum	22 mA	22 mA	**aSU,j=22<cr><lf>**
Aout2, wind direction error indication	2 mA	22 mA	**aSU,k=2<cr><lf>**

You can configure output scaling or transfer function settings by changing the custom gain and offset. The basic measurement units are m/s and degrees. The physical output unit is A. The following formula shows the impact of gain and offset values on the produced output:

$$o = y0 + k \times s$$

o	Produced analog output (A)
s	Measured wind speed or wind direction (in m/s or °)
k	Selected gain value
y0	Selected offset value

8.7.3 Analog output signal for wind speed channel

The analog interfaces setup, default configuration:

Current output 4 ... 20 mA, offset 4 mA

4 mA = 0 m/s

20 mA = 60 m/s (0,266667 mA/m/s)

Error indication sets output to 2 mA.

The analog interfaces setup, configuration 2:

Current output 0 ... 20 mA, offset 0 mA

0 mA = 0 m/s 20 mA = 60 m/s (0.333333 mA/m/s)

Error indication sets output to 22 mA.

8.7.4 Analog output signal for wind direction channel

Analog interfaces setup default configuration:

Current output 4 ... 20 mA, offset 4 mA

陕西威瑞仪器仪表有限公司 生产代理销售：实验检测设备 气象科学仪器设备
Tel:029-88186182 Web:www.qixiangzhan.cn Email:sxvery@163.com

4 mA = 0 degree 20 mA = 360 degree (0,044444 mA/°)

Error indication sets output to 2 mA

Analog interfaces setup, configuration 2:

Current output degree 0 ... 20 mA, offset 0 mA

0 mA = 0 degree

20 mA = 360 degree (0,055556 mA/°)

Error indication sets output to 22 mA

8.7.5 Enabling or disabling analog output

When changing the analog output setting, the setting is applied after the transmitter reset. When analog output is in use, the serial port does not work but the service connector does.

The 12th bit from left determines if analog output is enabled:

- Analog output enabled at the factory: `0XF,f=1111111111110000`
- Analog output disabled at the factory: `0XF,f=1111111111100000`

You can enable or disable analog output with the **`aWU,R=`** command.

- To enable analog output: Change bit 7 to 1. `0WU,R=1111111111111100`
- To disable analog output: Change bit 7 to 0. `0WU,R=1111110111111100`

More information

- Enabling and disabling analog input (page 137)

陕西威瑞仪器仪表有限公司 生产代理销售：实验检测设备 气象科学仪器设备
Tel:029-88186182 Web:www.qixiangzhan.cn Email:sxvery@163.com

9. Maintenance

WXT530 requires the following maintenance activities.

Table 40 WXT530 maintenance

Task	Frequency
Clean the transmitter.	As needed
Clean the radiation shield.	Once a year
Replace the PTU module.	Every 2 years

9.1 Cleaning

To ensure the accuracy of measurement results, clean the transmitter when it gets contaminated. Remove leaves and other such particles from the precipitation sensor and clean the transmitter carefully with a soft, lint-free cloth moistened with mild detergent. Wipe with soft cloth or sponge and rinse with clean water.

Do not use solvents or abrasive sponges when cleaning painted surfaces.

9.2 Cleaning radiation shield

Vaisala recommends that you clean the radiation shield once a year.

1. Clean the radiation shield with a soft cloth.

   Do not paint the radiation shield.

2. If the radiation shield looks worn and yellow, you can replace it with a radiation shield spare part (218817SP).

9.3 Replacing PTU module

WXT536	WXT535	WXT534	WXT533	WXT532	WXT531
✔	✔	✔			

陕西威瑞仪器仪表有限公司 生产代理销售：实验检测设备 气象科学仪器设备
Tel:029-88186182 Web:www.qixiangzhan.cn Email:sxvery@163.com

- 3-mm Allen key

In demanding applications, Vaisala recommends changing the PTU module every 2 years.

1. Turn off the power.

陕西威瑞仪器仪表有限公司 生产代理销售：实验检测设备 气象科学仪器设备
Tel:029-88186182 Web:www.qixiangzhan.cn Email:sxvery@163.com

2. Loosen the 3 mounting screws at the bottom assembly of the transmitter and pull them out.

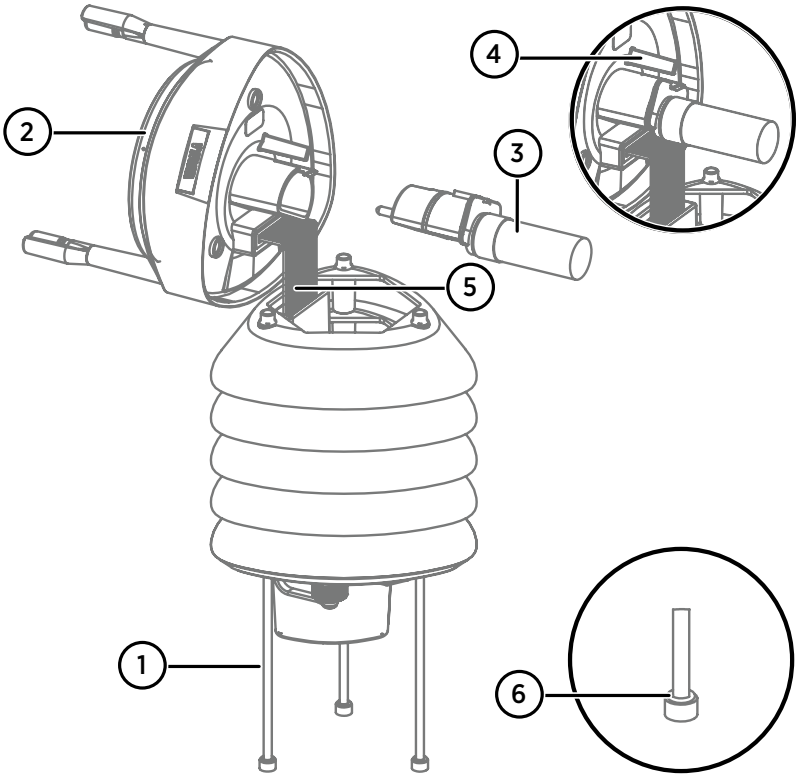

1 Fixing screws
2 Top of transmitter
3 PTU module
4 Latch
5 Flat cable
6 O-ring

3. Turn out the top of the transmitter.
4. Release the small white latch and remove the PTU module.
5. Remove the vacuum bag protecting the PTU module.

陕西威瑞仪器仪表有限公司 生产代理销售：实验检测设备 气象科学仪器设备
Tel:029-88186182 Web:www.qixiangzhan.cn Email:sxvery@163.com

6. Connect the new PTU module.



CAUTION! Avoid touching the white filter cap.

7. Turn the top back in. Make sure the flat cable does not get stuck or squeezed between the top and the funnel for the flat cable and it is properly connected.
8. If the O-rings are damaged, replace them with new ones.
9. Tighten the fixing screws.



To make sure that the radiation shield stays straight, do not tighten the screws all the way in one go. Do not overtighten.

陕西威瑞仪器仪表有限公司 生产代理销售：实验检测设备 气象科学仪器设备
Tel:029-88186182 Web:www.qixiangzhan.cn Email:sxvery@163.com

10. Troubleshooting

Table 41 Data validation

Problem	Possible causes	Action(s)
Wind measurement failure. Both the speed and direction units are replaced by a # sign or the data values are irrelevant.	Blockage (trash, leaves, branches, bird, snow, ice) between the wind transducers. Incorrect <cr><lf> settings in the terminal program.	Remove the blockage, and check that the wind transducers are not damaged. If the blockage is ice or snow, it will melt after some time if heating is enabled. Time for clearance depends on the severity of the weather event. If birds are causing the blockage, consider using the bird kit. In ASCII and NMEA protocols both <cr> and <lf> are required after each command. Check that your terminal program sends both when pressing enter. Note: The direction unit is # for the wind speeds less than 0.05 m/s.
Pressure, humidity or temperature measurement failure. The unit is replaced by a # sign or the data values are irrelevant.	The PTU module may not be properly connected. There may be water in the PTU module.	Ensure the proper connection of the PTU module. Remove and dry the module.

陕西威瑞仪器仪表有限公司 生产代理销售：实验检测设备 气象科学仪器设备
Tel:029-88186182 Web:www.qixiangzhan.cn Email:sxvery@163.com

Table 42 Communication problems

Problem	Possible causes	Action(s)
No response to any commands.	Wrong wiring or operation voltage not connected. Baud rate/start bits/ parity/stop bit settings do not match between the device and the host.	Check the wiring and operation voltage. See Power management (page 53).Connect the service cable, use the communication settings 19200,8 N,1. Check the serial port settings of the device with Configuration Tool or with terminal program. Use command **aXU!** (SDI-12) or **aXU<cr><lf>** (ASCII/NMEA). Change the values if needed. A software/hardware reset is needed to validate the changes. When you have no service cable, try typing address query commands **?!** and **?<cr><lf>** with different serial settings in terminal program. When the communication parameters match, the device responds with its address. The settings can now be changed using **aXU!** (SDI-12) or **aXU<cr><lf>** (ASCII/NMEA) commands. A software/hardware reset is needed to validate the changes.
	Incorrect <cr><lf> settings in the terminal program.	In ASCII and NMEA protocols both <cr> and <lf> are required after each command. Check that your terminal program sends both when pressing enter.
Connection works but data messages not available.	Wrong device address in a SDI-12 command or a mistyped SDI-12 command (in SDI-12 a mistyped command is in no way responded). A command mistyped in ASCII/ NMEA mode while error messaging/text messages is disabled (**aSU,S=N**).	Request the device address with **?!** command and then retype the command now with the correct address. Check the data query commands. See Retrieving data messages (page 79). Enable the error messaging using the Vaisala Configuration Tool or any terminal by setting **aSU,S=Y**, then try the command again.

陕西威瑞仪器仪表有限公司 生产代理销售：实验检测设备 气象科学仪器设备
Tel:029-88186182 Web:www.qixiangzhan.cn Email:sxvery@163.com

Problem	Possible causes	Action(s)
Data messages are not in expected format.	The communication protocol may not be the one you want.	Check the communication protocol of the device by using the Vaisala Configuration Tool or any terminal with command **aXU,M!** (SDI-12) **aXU,M<cr><lf>** (ASCII/NMEA) and change it if needed.
Some parameters are missing from the data messages.	The formatting of the data messages is not what you expect.	Format the data messages of the concern by using the Vaisala Configuration Tool or any terminal program.
An error message as a response to a command.	See Error messaging/text messages (page 151) .	See Error messaging/text messages (page 151).
The transmitter keeps sending the message "TX Sync/address error".	The polling address and the transmitter address do not match. The transmitter is on an RS-485 bus with other polled devices and Error Messages are enabled.	Set correct address either for the transmitter or to the polling request. Disable the Error Messages with the command **aSU,S=N <cr><lf>**.
mA messages cannot be found.	No mA output ordered.	You must specify the mA option when you place the order.
Analog input messages are missing.	Analog input messages are not enabled.	Enable analog input messages. See Enabling or disabling analog output (page 144).
Precipitation messages missing.	No precipitation measurement in models WXT534 and WXT532.	

10.1 Self-diagnostics

10.1.1 Error messaging/text messages

The transmitter sends a text message when certain type of errors occur. The function works in all communication modes except in the SDI-12 mode. You can disable error messaging by using the supervisor message **aSU, S=N**.

Examples:

```
0R1!0TX,Unable to measure error<cr><lf>
```

(request of wind data while all the wind parameters were disabled from the wind message)

```
1XU!0TX,Sync/address error<cr><lf>
```

(wrong device address. Ask the correct address with **?** or **?!** command.)

陕西威瑞仪器仪表有限公司 生产代理销售：实验检测设备 气象科学仪器设备
Tel:029-88186182 Web:www.qixiangzhan.cn Email:sxvery@163.com

```
0XP!0TX,Unknown cmd error<cr><lf>
```

```
0xUabc!0TX,Use chksum CCb<cr><lf>
```

(wrong checksum applied to the **0xU** command)

Table 43 Error messaging/text messages

Text message identifier (NMEA 0183 v3.0 protocol only)	Text message	Definition
01	Unable to measure error	The requested parameters are not activated in the message. Check the parameter section fields.
02	Sync/address error	The device address in the beginning of the command is invalid. Ask the device address with the command **?!** (SDI-12) or **?<cr><lf>** (ASCII and NMEA) and retype the command with the correct address.
03	Unknown cmd error	The command is not supported, use the correct command format. See Retrieving data messages (page 79).
04	Profile reset	Checksum error in configuration settings during power-up. Factory settings used instead.
05	Factory reset	Checksum error in calibration settings during power-up. Factory settings used instead.
06	Version reset	New software version in use.
07	Start-up	Software reset. Program starts from the beginning.
08	Use chksum xxx	Given checksum not correct for the command. Use the proposed checksum.
09	Measurement reset	The ongoing measurement of all the sensors interrupted and started from the beginning.
10	Rain reset	The precipitation sensor counter reset.
11	Inty reset	Precipitation sensor intensity counter reset.

If you use a WXT530 transmitter on an RS-485 bus with other polled devices, you must disable error messaging with the command **0SU,S=N<crlf>**.

陕西威瑞仪器仪表有限公司 生产代理销售：实验检测设备 气象科学仪器设备
Tel:029-88186182 Web:www.qixiangzhan.cn Email:sxvery@163.com

More information

- Troubleshooting (page 149)
- Sensor and data message settings (page 116)

10.1.2 Rain and wind sensor heating control

The supervisor message **aSU** shows you continuously monitored information about rain and wind sensor heating (heating temperature **Th** and heating voltage **Vh**).

The heating temperature should stay above 0 °C when the heating is on (except in extremely cold conditions where the heating power is not sufficient). The heating voltage **Vh** should correspond to the heating voltage supplied. If there is a remarkable deviation, check the wiring. Note that wire gauge should be large enough to avoid remarkable voltage drop in the cable.

In case AC or full-wave rectified AC is used for the heating, the **Vh** measurement behaves as follows:
While heating is off, **Vh** indicates the positive peak value (V_p) of the heating voltage waveform.
While heating is on, **Vh** indicates:

- 0.35 × V_p in case of AC voltage
- 0.70 × V_p in case of full-wave rectified AC voltage

10.1.3 Operating voltage control

The supervisor message **aSU** shows you continuously monitored supply voltage level (Vs). In case of deviations between the supplied voltage and monitored voltage, check the wiring and the power supply.

10.1.4 Missing readings and error indication

If the transmitter is not able to measure the wind, it indicates a missing reading in the output. The most common reasons for measurement problems are foreign objects, such as ice, birds, or other foreign objects, on the line of measurement, or sound reflections from nearby objects, such as wind tunnel walls.

陕西威瑞仪器仪表有限公司 生产代理销售：实验检测设备 气象科学仪器设备
Tel:029-88186182 Web:www.qixiangzhan.cn Email:sxvery@163.com

11. Technical specifications

11.1 WXT530 specifications

Table 44 Barometric pressure measurement performance

Property	Description/Value
Observation range	500 ... 1100 hPa
Accuracy (for sensor element) at 600 ... 1100 hPa	±0.5 hPa at 0 ... +30 °C (+32 ... +86 °F) ±1 hPa at −52 ... +60 °C (−60 ... +140 °F)
Output resolution	0.1 hPa / 10 Pa / 0.001 bar / 0.1 mmHg / 0.01 inHg
Units available	hPa, Pa, bar, mmHg, inHg

Table 45 Air temperature measurement performance

Property	Description/Value
Observation range	−52 ... +60 °C (−60 ... +140 °F)
Accuracy (for sensor element) at +20 °C (+68 °F) [1)]	±0.3 °C (±0.54 °F)
Output resolution	0.1 °C (0.1 °F)
Units available	°C, °F

1) A naturally aspirated radiation shield is applied which can affect readings in calm wind.

Table 46 Relative humidity measurement performance

Property	Description/Value
Observation range	0 ... 100 %RH
Accuracy (for sensor element) [1)]	±3 %RH at 0 ... 90 %RH ±5 %RH at 90 ... 100 %RH
Output resolution	0.1 %RH
PTU measuring interval	1 ... 3600 s (= 60 min), at 1 s steps

1) A naturally aspirated radiation shield is applied which can affect readings in calm wind.

陕西威瑞仪器仪表有限公司 生产代理销售：实验检测设备 气象科学仪器设备
Tel:029-88186182 Web:www.qixiangzhan.cn Email:sxvery@163.com

Table 47 Precipitation measurement performance

Property [1]	Description/Value
Collecting area	60 cm^2 (9.3 in^2)
Rainfall [2]	
Output resolution	0.01 mm (0.001 in)
Field accuracy for daily accumulation [3]	Better than 5 %, weather-dependent
Units available	mm, in
Duration	Counting each 10-second increment whenever droplet detected
Duration output resolution	10 s
Intensity	Running 1-minute average, 10 s steps
Intensity observation range	0 … 200 mm/h (0 … 7.87 in/h) (broader with reduced accuracy)
Intensity output resolution	0.1 mm/h (0.01 in/h)
Units available	mm/h, in/h
Hail [4]	
Output resolution	0.1 hits/cm^2 (1 hits/in^2), 1 hit
Units available	hits/cm^2, hits/in^2, hits
Intensity output resolution	0.1 hits/cm^2h (1 hits/in^2h), 1 hit/h
Units available	hits/cm^2h, hits/in^2h, hits/h

1) *Precipitation measurement is performed for liquid precipitation.*
2) *Cumulative accumulation after the latest automatic or manual reset.*
3) *Due to the nature of the phenomenon, deviations caused by spatial variations may exist in precipitation readings, especially in short time scale. The accuracy specification does not include possible wind-induced error.*
4) *Cumulative number of hits against collecting surface.*

Table 48 Wind measurement performance

Property	Description/Value
Wind speed [1]	
Observation range	0 … 60 m/s (134 mph)
Reporting range	0 … 75 m/s (168 mph)
Response time	0.25 s

陕西威瑞仪器仪表有限公司 生产代理销售：实验检测设备 气象科学仪器设备
Tel:029-88186182 Web:www.qixiangzhan.cn Email:sxvery@163.com

Property	Description/Value
Available variables	Average, maximum, and minimum
Accuracy	±3 % at 10 m/s (22 mph)
Output resolution	0.1 m/s (km/h, mph, knots)
Units available	m/s, km/h, mph, knots
Wind direction [1]	
Azimuth	0 ... 360°
Response time	0.25 s
Available variables	Average, maximum, and minimum
Accuracy	±3.0° at 10 m/s (22 mph)
Output resolution	1°
Averaging time	1 ... 3600 s, sample rate 1, 2, or 4 Hz (configurable)

1) NTP (normal temperature and pressure) condition applied for wind tunnel testing.

Table 49 Inputs and outputs

Property	Description/Value
Operating voltage	6 ... 24 V DC (–10 ... +30 %)
Average power consumption	Minimum: 0.1 mA at 12 V DC (SDI-12 standby) Typical: 3.5 mA at 12 V DC (typical measuring intervals) [1] Maximum: 15 mA at 6 V DC (constant measurement of all parameters)
Heating voltage	DC, AC, or full-wave rectified AC 12 ... 24 V DC (–10 ... +30 %) 12 ... 17 V AC_{rms} (–10 ... +30 %)
Typical heating current	12 V DC: 800 mA, 24 V DC: 400 mA 12 V AC_{rms}: 1.1 A 17 V AC_{rms}: 800 mA
Digital outputs	SDI-12, RS-232, RS-485, RS-422
Communication protocols	SDI-12 v1.3, Modbus RTU, ASCII automatic and polled, NMEA 0183 v3.0 with query option
Self-diagnostic	Separate supervisor message, unit/status fields to validate measurement stability

陕西威瑞仪器仪表有限公司 生产代理销售：实验检测设备 气象科学仪器设备
Tel:029-88186182 Web:www.qixiangzhan.cn Email:sxvery@163.com

Property	Description/Value
Startup	Automatic, < 5 seconds from power on to the first valid output

1) *Wind 10-second average with 2-minute interval at 4 Hz sampling rate, RS-232 19200 bps with jumper wires, PTU 10-second interval, Pt1000, level, tipping bucket, and solar radiation 5-second interval.*

Table 50 WXT536 analog input options

Parameter	Element	Range	Input [1]	Excitation	Resolution
Temperature (Pt1000)	Resistor	800 ... 1330 Ω	2-wire 4-wire	2.5 V	16 bits
Solar radiation	Thermopile	0 ... 25 mV	4 MΩ	–	12 bits
Voltage input	Voltage	0 ... 2.5 V 0 ... 5 V 0 ... 10 V	> 10 kΩ	–	12 bits
Tipping bucket rain gauge	Frequency	0 ... 100 Hz	18 kΩ	3.5 V	–

1) *The input can be wiring type, input impedance, or pull-up resistor value.*

Table 51 WXT530 analog mA output options

Parameter [1]	Description/Value
Wind speed	0 ... 20 mA or 4 ... 20 mA
Wind direction	0 ... 20 mA or 4 ... 20 mA
Load impedance	Max. 200 Ω
Update interval	Max. 4 Hz

1) *When the analog output option is applied, digital communication is not available.*

Table 52 Operating environment

Property	Description/Value
Operating environment	Outdoor use
Operating temperature	−52 ... +60 °C (−60 ... +140 °F)
Storage temperature	−60 ... +70 °C (−76 ... +158 °F)
Operating humidity	0 ... 100 %RH

陕西威瑞仪器仪表有限公司 生产代理销售：实验检测设备 气象科学仪器设备
Tel:029-88186182 Web:www.qixiangzhan.cn Email:sxvery@163.com

Property	Description/Value
Operating pressure	500 ... 1100 hPa
Wind [1)]	0 ... 60 m/s (0 ... 134 mph)
IP rating	Without mounting kit: IP65: Dust-tight. Protected from water jets from any direction. With mounting kit: IP66: Dust-tight. Protected from powerful water jets from any direction.

1) *Due to the measurement frequency used in the sonic transducers, RF interference in the 200 ... 400 kHz range can disturb wind measurement.*

Table 53 Mechanical specifications

Property	Description/Value
Weight	
WXT534, WXT535, WXT536	0.7 kg (1.54 lb)
WXT531, WXT532, WXT533	0.5 kg (1.1 lb)
Materials	
Radiation shield, top, and bottom parts	Polycarbonate +20 % fiberglass
Precipitation sensor plate	Stainless steel (AISI 316)

Table 54 Compliance

Property	Description/Value
EU directives and regulations	EMC Directive (2014/30/EU) RoHS Directive (2011/65/EU) amended by 2015/863
Electromagnetic compatibility (EMC)	EN 61326-1, industrial environment CISPR 32 / EN 55032, Class B
Environmental	IEC 60068-2-1, 2, 6, 14, 30, 31, 78 IEC 60529, VDA 621-415
Maritime	IEC 60945 (Exposed) DNV GL Type Examination Certificate No. TAA00000VF
Compliance marks	CE, RCM, RoHS, China RoHS, UKCA

陕西威瑞仪器仪表有限公司 生产代理销售：实验检测设备 气象科学仪器设备
Tel:029-88186182 Web:www.qixiangzhan.cn Email:sxvery@163.com

CAUTION! Any temporary object (such as snow, ice, or a bird) that blocks the observation path between the ultrasonic transducer heads may lead to inaccurate or incorrect measurements.

Extreme operating conditions can alter the performance temporarily.

CAUTION! Make sure that you power up the sensor after installation. Storing the sensor outdoors without a proper package or not powering up after installation can affect the expected lifespan of the sensor.

Select a heated sensor model if you operate the sensor in humid conditions.

Select a heated sensor model if you operate the sensor in temperatures below 0 °C (+32 °F).

Table 55 Electromagnetic compatibility

Applicable standard	Description	Level tested	Performance [1]
CISPR 32 / EN 55032, Class B	Radiated emissions	30 MHz ... 18 GHz	Class B
CISPR 32 / EN 55032, Class B	Conducted emissions DC	150 kHz ... 30 MHz	Class B
IEC 61000-4-2	Electrostatic discharge	8 kV con / 15 kV air	B
IEC 61000-4-3	RF field immunity	10 V/m [2]	A
IEC 61000-4-4	Electric fast transient	3 kV	B
IEC 61000-4-5	Surge	2 kV	B
IEC 61000-4-6	Conducted RF immunity	10 V	A
IEC 60945	Radiated emissions	150 kHz ... 2 GHz	Exposed
IEC 60945	Conducted emissions	10 kHz ... 30 MHz	Exposed
IEC 60945	Electrostatic discharge	8 kV con / 15 kV air	B
IEC 60945	RF field immunity	10 V/m [2]	A

陕西威瑞仪器仪表有限公司 生产代理销售：实验检测设备 气象科学仪器设备
Tel:029-88186182 Web:www.qixiangzhan.cn Email:sxvery@163.com

Applicable standard	Description	Level tested	Performance [1]
IEC 60945	Electric fast transient	3 kV	B
IEC 60945	Surge	2 kV	B
IEC 60945	Conducted RF immunity	10 V	A
IEC 60945	Conducted low frequency interference immunity	3 V	B
IEC 60945	Extreme power supply variation	–10 % +30 %	A
IEC 60945	Power supply failure	3 times 60 s	B

1) A = Normal performance

B = Temporary degradation (self-recoverable)

C = Temporary degradation (operator intervention needed)

D = Not recoverable

2) Within frequency range 2 ... 6 GHz minimum immunity for WXT is 4V/m.

陕西威瑞仪器仪表有限公司 生产代理销售：实验检测设备 气象科学仪器设备
Tel:029-88186182 Web:www.qixiangzhan.cn Email:sxvery@163.com

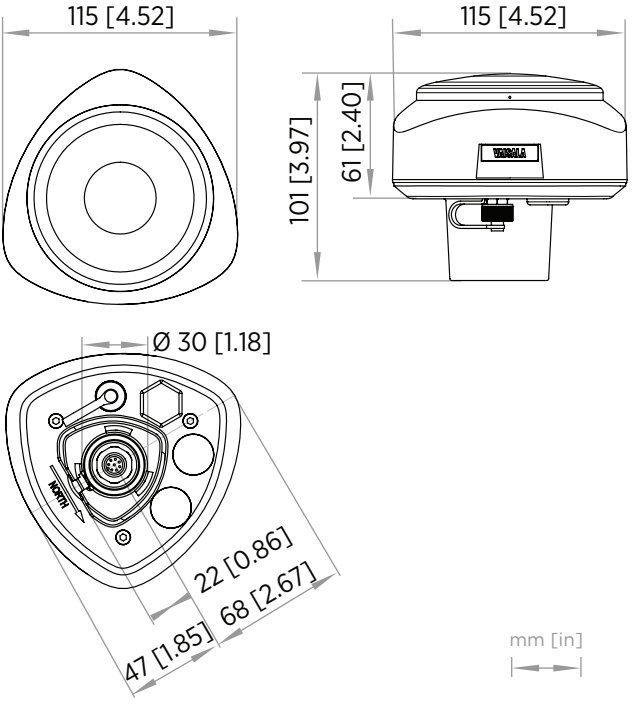

Figure 27 WXT531 dimensions

陕西威瑞仪器仪表有限公司 生产代理销售：实验检测设备 气象科学仪器设备
Tel:029-88186182 Web:www.qixiangzhan.cn Email:sxvery@163.com

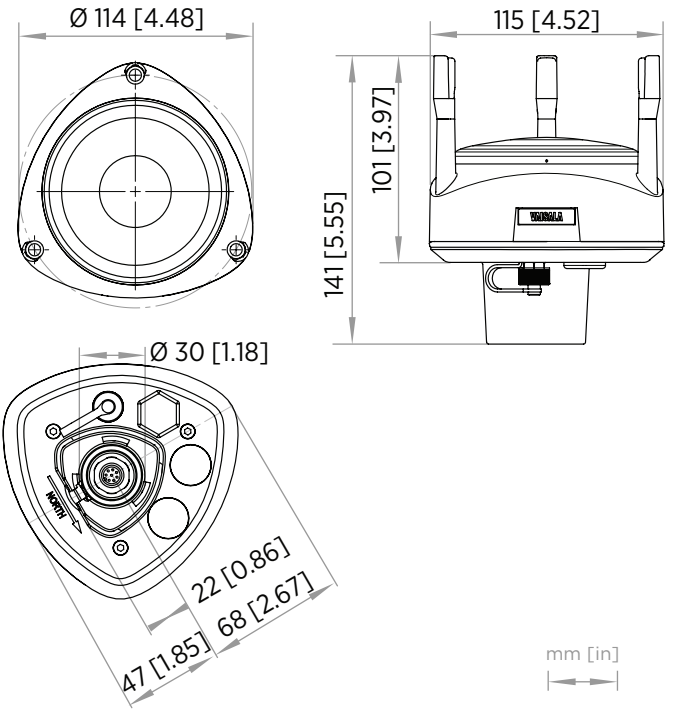

Figure 28 WXT533 and WXT532 dimensions

陕西威瑞仪器仪表有限公司 生产代理销售：实验检测设备 气象科学仪器设备
Tel:029-88186182 Web:www.qixiangzhan.cn Email:sxvery@163.com

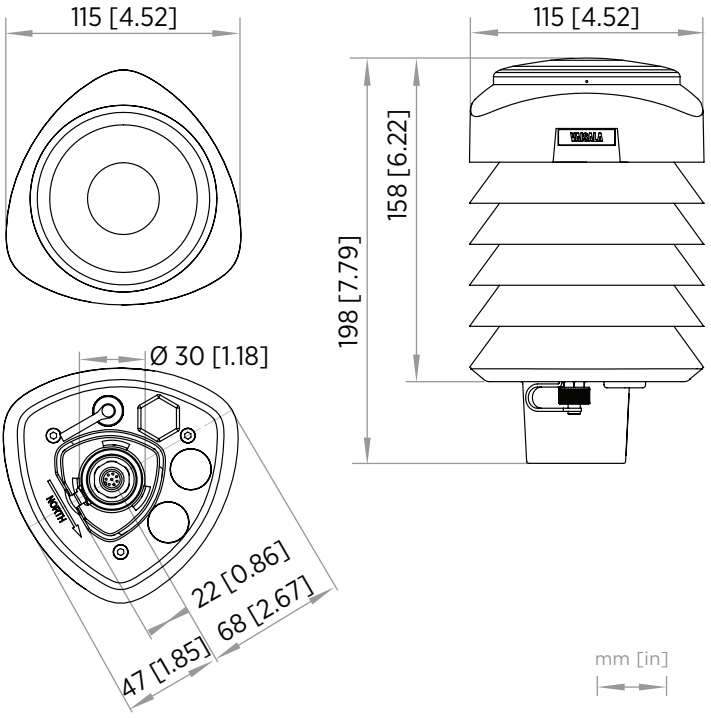

Figure 29 WXT535 and WXT534 dimensions

陕西威瑞仪器仪表有限公司 生产代理销售：实验检测设备 气象科学仪器设备
Tel:029-88186182 Web:www.qixiangzhan.cn Email:sxvery@163.com

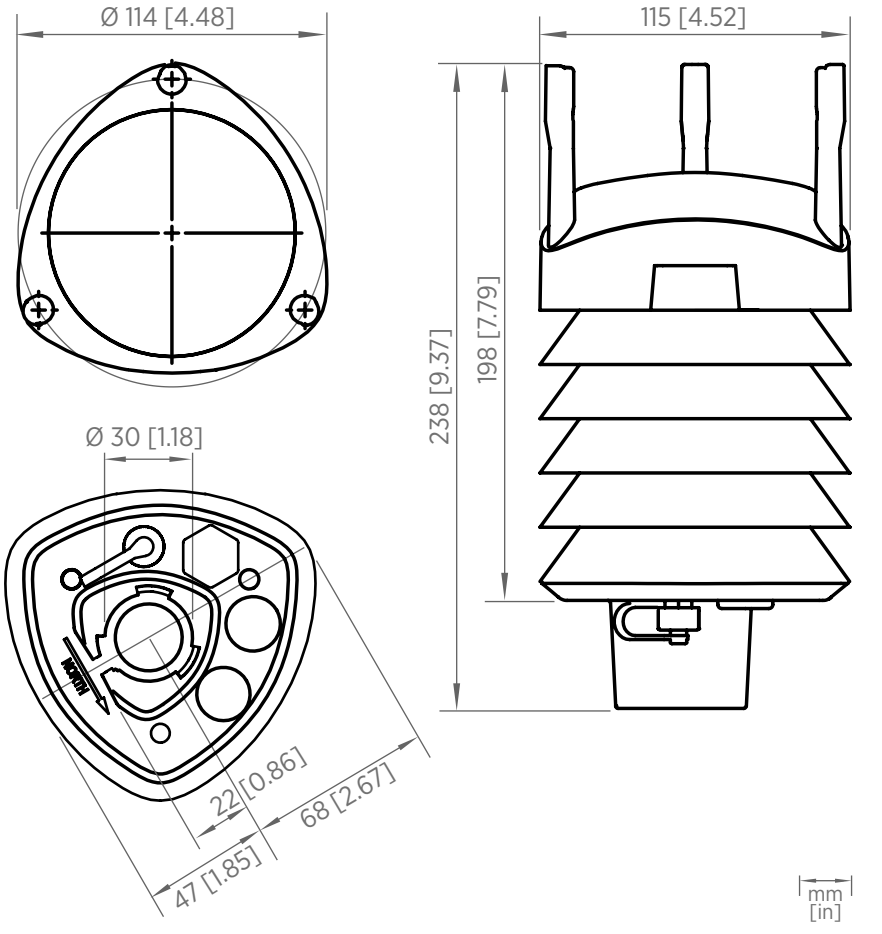

Figure 30 WXT536 dimensions

陕西威瑞仪器仪表有限公司 生产代理销售：实验检测设备 气象科学仪器设备
Tel:029-88186182 Web:www.qixiangzhan.cn Email:sxvery@163.com

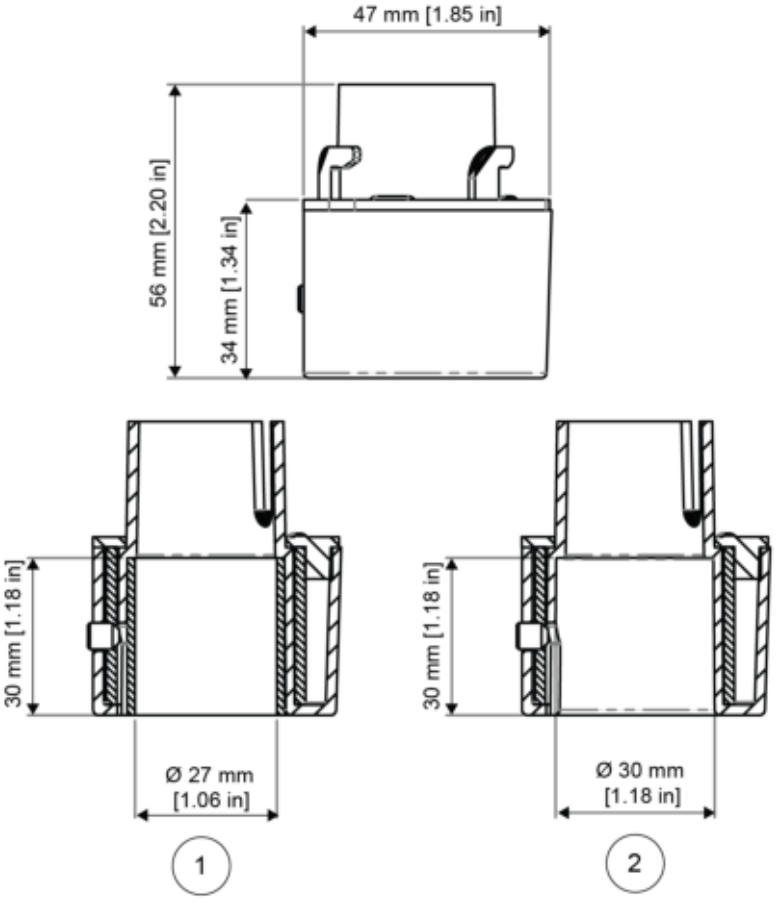

Figure 31 WXT530 mounting kit (212792) dimensions

1 Mounting kit with adapter sleeve for Ø 26.7 mm (1.05 in) mast tube
2 Mounting kit without adapter sleeve for Ø 30 mm (1.18 in) mast tube

11.2 Type label

All WXT530 series transmitters can be identified from the type label.

陕西威瑞仪器仪表有限公司 生产代理销售：实验检测设备 气象科学仪器设备
Tel:029-88186182 Web:www.qixiangzhan.cn Email:sxvery@163.com

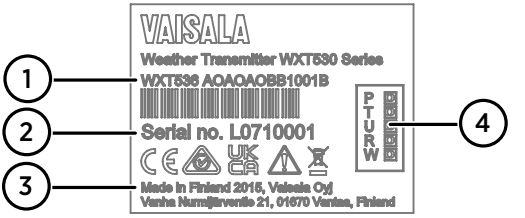

Figure 32 Type label

1 Product code
2 Serial number in bar code
3 Place of manufacture
4 Symbols indicating measurement options included:
- P = pressure
- T= temperature
- U = humidity
- R = precipitation
- W = wind

11.3 Options and accessories

Table 56 Options and accessories

Description	Order code
Vaisala Configuration Tool and USB service cable SP	220614
Cable USB RS-232/RS-485 1.4 m USB M12 SP	220782
Cable 2 m shielded 8-pin M12 SP	222287
Cable 10 m shielded 8-pin M12 SP	222288
Cable 40 m shielded 12-pin, open end wires SP	217020
Cable USB with power supply RS-232 / 485 USB/M12SP / 100 - 240 V AC	263193SP
Cable 10 m shielded 8-pin M12	CBL210679
Cable 50 m shielded 8-pin M12, open end wires	245931
Bushing and grounding kit	222109
Mounting kit	212792
Mounting accessory between mounting kit and 60 mm tube	WMSFIX60
Bird kit	212793
Vaisala surge protector, no connectors	WSP150

陕西威瑞仪器仪表有限公司 生产代理销售：实验检测设备 气象科学仪器设备
Tel:029-88186182 Web:www.qixiangzhan.cn Email:sxvery@163.com

Description	Order code
Vaisala surge protector with connectors for 220782 and CBL210679	WSP152
Nokeval converter	229104
Nokeval programming kit	229110
WXT radiation shield set SP	218817SP
WXT PTU module SP	WXTPTUSP
WXT bottom connector kit SP	224171
Analog input connectors SP, IP67, 8P, M12, shielded	214273
WXT530 bottom assembly with digital board SP	WXT530BOTTOMDIGISP
WXT530 bottom assembly with analog input board SP	WXT530BOTTOMANAINSP
WXT530 bottom assembly with mA output board SP	WXT530BOTTOMMAOUTSP

More information

- Optional features (page 22)

陕西威瑞仪器仪表有限公司 生产代理销售：实验检测设备 气象科学仪器设备
Tel:029-88186182 Web:www.qixiangzhan.cn Email:sxvery@163.com

Appendix A. Networking

A.1 Connecting several transmitters on same bus

There are 2 options for connecting several transmitters on the same bus:

- Using SDI-12 serial interface and communication protocol
- Using RS-485 serial interface and one of the communication protocols: ASCII or NMEA 0183 v3.0.

A.2 SDI-12 serial interface

A.2.1 Wiring SDI-12

1. Perform SDI-12 wiring in the transmitter as described in Power management (page 53).

   Make sure you combine the 2 "Data in/out" wires of each transmitter either in the internal screw terminal inside or outside the transmitter.

2. In the data logger end, combine the "GND for data" wires of each transmitter to the logger "GND for data" wire. Connect the "Data in/out" wires of each transmitter to the logger "Data" wire.

A.2.2 SDI-12 communication protocol

Set the communication protocol SDI-12 v 1.3 (`aXU,C=1,M=S`) or SDI- 12 v1.3 continuous (`aXU,C=1,M=R`).

Assign the transmitters on the bus with different addresses (for example: `aXU,A=0,1,2,`...). After that, the transmitters on the bus do not respond to the commands not assigned to them nor to the data messages sent by the other transmitters.

Example (a bus with three WXT530 series transmitters):

WXT530 #1 communication settings:

```
0XXU,A=0,M=S,C=1,B=1200,D=7,P=E,S=1, L=25
```

WXT530 #2 communication settings:

```
1XXU,A=1,M=S,C=1,B=1200,D=7,P=E,S=1, L=25
```

WXT530 #3 communication settings:

```
2XXU,A=2,M=S,C=1,B=1200,D=7,P=E,S=1, L=25
```


陕西威瑞仪器仪表有限公司 生产代理销售：实验检测设备 气象科学仪器设备
Tel:029-88186182 Web:www.qixiangzhan.cn Email:sxvery@163.com

If simultaneous measurements of the different units are needed, Start concurrent measurement commands **aC** and **aCC** must be used for all devices. If the measurements are to be performed consecutively for only one unit at a time, in addition to these also Start measurement commands **aM** and **aMC** can be used. Start continuous measurement commands **aR1**, **aR2**, **aR3**, **aR5**, **aR**, **aRC1**, **aRC2**, **aRC3**, **aRC5** and **aRC** available only in SDI-12 continuous protocol (`aXU,M=R`) can be used either for simultaneous measurements of the units or consecutive measurements for one unit at time.

A.3 RS-485 serial interface

A.3.1 RS-485 wiring

1. Make the RS-485 wiring of the transmitter. See Power management (page 53).
2. In the data logger end, combine the "Data +" wires of each transmitter to the logger "Data +" wire. Connect the "Data-" wires of each transmitter to the logger "Data -" wire.

A.3.2 RS-485 communication protocol

Set the communication protocol to ASCII polled (with or without CRC) or NMEA query. When using NMEA query, the wind message must be set to XDR (**`aWU,N=T`**).



No matter which communication protocol, ASCII polled or NMEA query is chosen, the error messaging parameter of the supervisor message must be inactivated with **`aSU,S=N`** for each transmitter on the bus to prevent the units responding to the commands not assigned to them.

A.3.3 ASCII, polled

Assign different addresses to the transmitters on the bus (for example, `aXU,A=0,1,2,` ...).

Example (a bus with three transmitters):

WXT530 #1 communication settings:

```
0XU,A=0,M=P,C=3,I=0,B=19200,D=8,P=N,S=1,L=25
```

WXT530 #2 communication settings:

```
1XU,A=1,M=P,C=3,I=0,B=19200,D=8,P=N,S=1,L=25
```

WXT530 #3 communication settings:

```
2XU,A=2,M=P,C=3,I=0,B=19200,D=8,P=N,S=1,L=25
```

Example (composite data message queries to the sensors 1 and 3 are assigned as follows):

陕西威瑞仪器仪表有限公司 生产代理销售：实验检测设备 气象科学仪器设备
Tel:029-88186182 Web:www.qixiangzhan.cn Email:sxvery@163.com

```
0R0<cr><lf>

1R0<cr><lf>

2R0<cr><lf>
```

A.3.4 NMEA 0183 v 3.0 query

The NMEA 0183 query messages do not contain device address information. Individual query commands cannot be directed to different transmitters. Instead, a specific time slot method can be used for receiving data from several transmitters on the bus, just with a single query command.

To generate different time slots, each transmitter is given an individual delay for its query response, by using the RS-485 line delay parameter **aXU,L**. The parameter defines the time (in milliseconds) between the last character of the query and the first character of the response from the transmitter.

Example (a bus with 3 transmitters):

WXT530 #1 communication settings:

```
0XU,A=0,M=Q,C=3,I=0,B=4800,D=8,P=N,S=1,L=25
```

WXT530 #2 communication settings:

```
0XU,A=0,M=Q,C=3,I=0,B=4800,D=8,P=N,S=1,L=1000
```

WXT530 #3 communication settings:

```
0XU,A=0,M=Q,C=3,I=0,B=4800,D=8,P=N,S=1,L=2000
```

When the query command **$--WIQ,XDR*2D<cr><lf>** is sent, WXT530 #1 responds after 25 ms, WXT530 #2 after 1000 ms, and WXT530 #3 responds after 2000 ms. The sufficient delays depend on the maximum number of characters in the response messages and the baud rate. Note that all the transmitters are assigned with the same address. The data logger, after sending the query, sorts out the response messages on the basis of the individual response times.

To gain more addressability transducer ID information provided in the **XDR** response messages can be used. If WXT530 address is set to **0** (**aXU,A=0**) and all parameters are chosen except Rain peak intensity and Hail peak intensity in the precipitation message, the response to the **XDR** query **$--WIQ,XDR*2D<cr><lf>** is:

陕西威瑞仪器仪表有限公司 生产代理销售：实验检测设备 气象科学仪器设备
Tel:029-88186182 Web:www.qixiangzhan.cn Email:sxvery@163.com

```
$WIXDR,A,316,D,0,A,326,D,1,A,330,D,2,S,0.1,M,0,S,0.1,M,1,S,0.1, M,2*57<cr><lf>

$WIXDR,C,24.0,C,0,C,25.2,C,1,H,47.4,P,0,P,1010.1,H, 0*54<cr><lf>

$WIXDR,V,0.000,I,0,Z,10,s,0,R,0.01,I,0,V,0.0,M,1,Z,0,s,1,R,0.0,M, 1*51<cr><lf>

$WIXDR,C,25.8,C,2,U,10.7,N,0,U,10.9,V,1,U,3.360,V,2*7D<cr><lf>
```

For the transducer IDs, see NMEA 0183 v3.0 protocol (page 102).

The maximum transducer ID is 3 when the transmitter address is 0. Assigning address 4 for the second and address 8 for the third transmitter on the bus the following responses to the XDR query **`$--WIQ,XDR*2D<cr><lf>`** are obtained from the transmitters (same message parameter configuration):

The second transmitter (address 4):

```
$WIXDR,A,330,D,4,A,331,D,5,A,333,D,6,S,0.1,M,4,S,0.1,M,5,S,0.2, M,6*55<cr><lf>

$WIXDR,C,23.5,C,4,C,24.3,C,4,H,49.3,P,4,P,1010.1,H, 3*59<cr><lf>

$WIXDR,V,0.000,I,4,Z,0,s,4,R,0.00,I,4,V,0.0,M,5,Z,0,s,5,R,0.0,M, 5*67<cr><lf>

$WIXDR,C,25.8,C,6,U,10.6,N,4,U,10.9,V,5,U,3.362,V,6*78<cr><lf>
```

The third transmitter (address 8):

```
$WIXDR,A,341,D,8,A,347,D,9,A,357,D,10,S,0.1,M,8,S,0.2,M,9,S,0.2,M,10*53<cr><lf>

$WIXDR,C,23.5,C,8,C,24.3,C,9,H,49.3,P,8,P,1010.1,H, 8*5F<cr><lf>

$WIXDR,V,0.000,I,8,Z,0,s,8,R,0.00,I,8,V,0.0,M,9,Z,0,s,9,R,0.0,M, 9*61<cr><lf>

$WIXDR,C,25.8,C,10,U,10.6,N,8,U,10.9,V,9,U,3.360,V, 10*7C<cr><lf>
```

Now the response messages of all 3 transmitters can be recognized and parsed by the data logger.



The transmitter address may consist of letter characters but the transducer IDs in the NMEA XDR messages can only be numbers. The addresses given in letters show in the transducer IDs in the following way: transmitter address = A => transducer ID = 10, B => 11, a => 36, b => 37, and so on.

A.3.5 NMEA 0183 v 3.0 query with ASCII query commands

You can use ASCII query commands **`aR1`**, **`aR2`**, **`aR3`**, **`aR5`**, **`aR`**, **`aR0`** and their CRC-versions **`ar1`**, **`ar2`**, **`ar3`**, **`ar5`**, **`ar,`** and **`ar0`** also in NMEA 0183 protocol. The responses to these commands will be in standard NMEA 0183 format and the transmitters are assigned with different addresses (for example: **`aXU,A=0,1,2,`**...). The RS-485 line delays are not needed.

Example (a bus with three transmitters, data requests with combined data message query commands; the same message parameter configuration as in the previous example):

陕西威瑞仪器仪表有限公司 生产代理销售：实验检测设备 气象科学仪器设备
Tel:029-88186182 Web:www.qixiangzhan.cn Email:sxvery@163.com

WXT530 #1 communication settings:

```
0XU,A=0,M=Q,C=3,I=0,B=4800,D=8,P=N,S=1,L=25
```

WXT530 #2 communication settings:

```
 0XU,A=1,M=Q,C=3,I=0,B=4800,D=8,P=N,S=1,L=25
```

WXT530 #3 communication settings:

```
0XU,A=2,M=Q,C=3,I=0,B=4800,D=8,P=N,S=1,L=25
```

The query for WXT530 #1 and the response:

```
0R<cr><lf>
$WIXDR,A,316,D,0,A,326,D,1,A,330,D,2,S,0.1,M,0,S,0.1,M,1,S,0.1, M,2*57<cr><lf>
$WIXDR,C,24.0,C,0,C,25.2,C,1,H,47.4,P,0,P,1010.1,H, 0*54<cr><lf>
$WIXDR,V,0.000,I,0,Z,10,s,0,R,0.01,I,0,V,0.0,M,1,Z,0,s,1,R,0.0,M, 1*51<cr><lf>
$WIXDR,C,25.8,C,2,U,10.7,N,0,U,10.9,V,1,U,3.360,V,2*7D<cr><lf>
```

The query for WXT530 #2 and the response:

```
1R<cr><lf>
$WIXDR,A,330,D,1,A,331,D,2,A,333,D,3,S,0.1,M,1,S,0.1,M,2,S,0.2, M,3*55<cr><lf>
$WIXDR,C,23.5,C,1,C,24.3,C,2,H,49.3,P,1,P,1010.1,H, 1*59<cr><lf>
$WIXDR,V,0.000,I,1,Z,0,s,1,R,0.00,I,1,V,0.0,M,2,Z,0,s,2,R,0.0,M, 2*67<cr><lf>
$WIXDR,C,25.8,C,3,U,10.6,N,1,U,10.9,V,1,U,3.362,V,2*78<cr><lf>
```

The query for WXT530 #3 and the response:

```
2R<cr><lf>
$WIXDR,A,341,D,2,A,347,D,3,A,357,D,4,S,0.1,M,2,S,0.2,M,3,S,0.2, M,4*53<cr><lf>
$WIXDR,C,23.5,C,2,C,24.3,C,3,H,49.3,P,2,P,1010.1,H, 2*5F<cr><lf>
$WIXDR,V,0.000,I,2,Z,0,s,2,R,0.00,I,2,V,0.0,M,3,Z,0,s,3,R,0.0,M, 3*61<cr><lf>
$WIXDR,C,25.8,C,4,U,10.6,N,2,U,10.9,V,2,U,3.360,V,3*7C<cr><lf>
```

If needed, for making the transducers IDs distinguishable, device addresses 0, 4, 8 can be used as described in the previous section.

陕西威瑞仪器仪表有限公司 生产代理销售：实验检测设备 气象科学仪器设备
Tel:029-88186182 Web:www.qixiangzhan.cn Email:sxvery@163.com

Appendix B. Modbus protocol

B.1 Modbus RTU protocol for WXT530

WXT530 Modbus communication is based on Modbus Application Protocol Specification V1.1b3

Modbus RTU is available for Vaisala Weather Transmitter WXT530 Series from firmware version 3.85 onwards.

Ordering new WXT530 with Modbus

To order the RS-485 Modbus option, use the order code WXT53X**U**XXXXXXXXXX.

To use Modbus with an existing WXT530, see Using Modbus with old WXT530 (page 189).

To change port settings, see Changing port settings (page 188).

WXT530 default Modbus settings

CLI is the command line interface, such as ASCII, NMEA, and SDI-12.
Vaisala WXT530 Configuration Tool works only in the CLI mode. To use Vaisala WXT530 Configuration Tool, change from the Modbus mode to the CLI mode first. See Changing from Modbus mode to CLI mode (page 187).

When you order WXT530 with Modbus, the default settings are the following:

Table 57 WXT530 default Modbus settings

Setting	WXT530 CLI mode	WXT530 Modbus mode
User port	ASCII polled with CRC [1)]	Modbus RTU
Service port [2)]	RS-232 19200, 8, N, 1	RS-232 19200, 8, N, 1
Default address	0	1

1) *Applies when you move from Modbus mode to CLI mode.*
2) *RS-232 19200, 8, N, 1 is the fixed service port setting for all WXT530 communication interface options. The service port uses always CLI.*

Note that parallel use of user port and service port is not supported.

陕西威瑞仪器仪表有限公司 生产代理销售：实验检测设备 气象科学仪器设备
Tel:029-88186182 Web:www.qixiangzhan.cn Email:sxvery@163.com

You can change WXT530 Modbus address by typing the new address to the holding register number 10 (0x0009).
To change the Modbus address in the CLI mode, see Changing Modbus address in CLI mode (page 189).

To use the Modbus protocol:
- Make sure that the firmware is 3.85, or newer. If not, update the firmware. See Updating WXT530 firmware (page 186).
- Change from the CLI mode to the Modbus mode. See Changing from CLI mode to Modbus mode (page 187).

The polling frequency must not be higher than the corresponding update interval. For example, 1 minute for average values.

B.2 Register maps

To avoid errors in transmission, Vaisala recommends implementing the retry functionality for Modbus master software. If the sensor does not respond to the first Modbus query command, the same query is sent again.

WXT530 has a non-isolated RS-485 serial line as a Modbus interface. WXT530 uses 2 Modbus register ranges:
- Holding registers (page 175)
- Input registers (page 176)

You can read the input registers and both read and write in the holding registers.

You can control device functionality and configuration in Modbus holding registers.

Table 58 Register ranges

Register range	Description	Register type
1 - 11	Device status	Holding
1 - 31	Commonly used unit system independent values	Input
32 - 51	Measurement values in metric units	Input
52 - 71	Measurement values in imperial units	Input
72 - 112	Other measurement values	Input

陕西威瑞仪器仪表有限公司 生产代理销售：实验检测设备 气象科学仪器设备
Tel:029-88186182 Web:www.qixiangzhan.cn Email:sxvery@163.com

The register values are expressed as 16-bit integers with the use of suitable scaling factors (SF), if needed. The measurement values are multiplied with a scaling factor and mapped to the 16-bit registers as an integer. The register value ranges are:

- 0 ... 65530 for unsigned (U) values. 65535 indicates an invalid or unavailable value.
- -32762 ... 32762 for signed (S) values. 32767 indicates an invalid or unavailable value.

B.2.1 Holding registers

Holding registers (configuration and function)

Table 59 Holding registers

		Value range					
Reg. no	**Address**	**Description**	**Default**	**Reg. min.**	**Reg. max.**	**SF [1)]**	**S/U [2)]**
1	0x0000	Altitude (m)	0	-100	5000	1	S
2	0x0001	Wind direction deviation angle (°)	0	-3599	3599	10	S
3	0x0002	Averaging interval, T, RH, X, A, Tdw (min)	10	1	10	1	U
4	0x0003	Averaging interval, air pressure (min)	10	1	10	1	U
5	0x0004	Averaging interval, wind (min)	1	1	10	1	U
6	0x0005	Averaging interval, solar radiation (min)	10	1	10	1	U
7	0x0006	Heating control	1	0	3 0, 1 or 3 = Heating on 2 = Heating off		U
8	0x0007	Reset rain accumulation counter			Write value 0x3247 => Precipitation counter reset		
9	0x0008	Reset device			Write value 0x3247 => Device reset		
10	0x0009	Modbus address	1	1	247		U
11	0x000A	CLI mode			Write value 0x0F => Switch into CLI mode		

1) Scaling factor
2) Signed / Unsigned

陕西威瑞仪器仪表有限公司 生产代理销售：实验检测设备 气象科学仪器设备
Tel:029-88186182 Web:www.qixiangzhan.cn Email:sxvery@163.com

B.2.2 Input registers

Input registers (device status and measurement values)

Table 60 Device status

			Register values			
Reg. no	**Address**	**Description**	**High byte**		**Low byte**	
1	0x0000	Device identification	WXT530 model	WXT531: 01 WXT532: 02 WXT533: 03 WXT534: 04 WXT535: 05 WXT536: 06	SW version	Value = last digits of SW version number
2	0x0001	Reserved				
3	0x0002	Measurement parameters according to different WXT530 model	Temperature	00 = Available 07 = Not available	Dew point	00 = Available 07 = Not available
4	0x0003		Relative humidity		Absolute humidity	
5	0x0004		Mixing ratio		Air pressure	
6	0x0005		Wind		Rain	
7	0x0006	External sensors at analog inputs [1]	Solar radiation sensor	00 = Connected 07 = Not connected	Level sensor	00 = Connected 07 = Not connected
8	0x0007		Temperature sensor		Rain gauge	

1) Only solar radiation and temperature sensor supported in measurement input registers.

Table 61 Commonly used unit system independent values

		Measurement range						
Reg. no	**Addr.**	**Quantity**		**Reg. min.**	**Reg. max.**	**Error value**	**SF [1]**	**S/U [2]**
11	0x000A	Relative humidity (%RH)	Instant	0	1000	32767	10	S
12	0x000B		Min.					
13	0x000C		Max.					
14	0x000D		Avg.					

陕西威瑞仪器仪表有限公司 生产代理销售：实验检测设备 气象科学仪器设备
Tel:029-88186182 Web:www.qixiangzhan.cn Email:sxvery@163.com

Measurement range								
Reg. no	**Addr.**	**Quantity**		**Reg. min.**	**Reg. max.**	**Error value**	**SF [1]**	**S/U [2]**
15	0x000E	Relative air pressure (hPa)	Instant	3000	12000	32767	10	S
16	0x000F		Min.					
17	0x0010		Max.					
18	0x0011		Avg.					
19	0x0012	Wind direction (°)	Instant	0	3599	32767	10	S
20	0x0013		Min.					
21	0x0014		Max.					
22	0x0015		Avg.					
23	0x0016		Raw					
24	0x0017	Reserved						
25	0x0018	Reserved						
26	0x0019	Precipitation type [3]	Instant	0	90	32767	1	S
27	0x001A	Wind measurement quality (%)	Instant	0	100	65535	1	U
28	0x001B	Global radiation (W/m^2)	Instant	0	20000	32767	10	S
29	0x001C		Min.					
30	0x001D		Max.					
31	0x001E		Avg.					

1) Scaling factor
2) Signed / Unsigned
3) Precipitation Type, register No. 26

- *0 = No Precipitation*
- *40 = Precipitation*
- *90 = Hail*

陕西威瑞仪器仪表有限公司 生产代理销售：实验检测设备 气象科学仪器设备
Tel:029-88186182 Web:www.qixiangzhan.cn Email:sxvery@163.com

Table 62 Measurement values in metric units (°C, m/s, mm, mm/h)

		Measurement range						
Reg. no	**Addr.**	**Quantity (Unit)**		**Reg. min**	**Reg. max**	**Error value**	**SF [1]**	**S/U [2]**
32	0x001F	Air temperature (°C)	Instant	-500	600	32767	10	S
33	0x0020		Min.					
34	0x0021		Max.					
35	0x0022		Avg.					
36	0x0023	Dew point (°C)	Instant	-500	600	32767	10	S
37	0x0024		Min.					
38	0x0025		Max.					
39	0x0026		Avg.					
40	0x0027	Wind chill temperature (°C)	Instant	-600	700	32767	10	S
41	0x0028	Reserved						
42	0x0029	Heater temperature (°C)	Instant	-500	1500	32767	10	S
43	0x002A	Wind speed (m/s)	Instant	0	750	32767	10	S
44	0x002B		Min.					
45	0x002C		Max.					
46	0x002D		Avg.					
47	0x002E	Reserved						
48	0x002F	Wind speed (m/s)	Raw	0	750	32767	10	S
49	0x0030	Precipitation accumulation (absolute) (mm) [3]	Instant	0	65530 [4]	65535	100	U
50	0x0031	Precipitation accumulation (differential) (mm) [5]	Instant	0	10000	65535	100	U
51	0x0032	Precipitation intensity (mm/h)	Instant	0	20000	65535	100	U

1) *Scaling factor*
2) *Signed / Unsigned*
3) *Continuous accumulated value*
4) *Precipitation accumulation saturates to maximum value. Write 0x3247 to Modbus register address 0x0007 to reset the precipitation counters.*

陕西威瑞仪器仪表有限公司 生产代理销售：实验检测设备 气象科学仪器设备
Tel:029-88186182 Web:www.qixiangzhan.cn Email:sxvery@163.com

5) Accumulated value between 2 consecutive requests

Table 63 Measurement values in imperial units (°F, mph, in, in/h)

		Measurement range						
Reg. no	**Addr.**	**Quantity**		**Reg. min.**	**Reg. max.**	**Error value**	**SF [1)]**	**S/U [2)]**
52	0x0033	Air temperature (°F)	Instant	-580	1400	32767	10	S
53	0x0034		Min.					
54	0x0035		Max.					
55	0x0036		Avg.					
56	0x0037	Dew point (°F)	Instant	-580	1400	32767	10	S
57	0x0038		Min.					
58	0x0039		Max.					
59	0x003A		Avg.					
60	0x003B	Wind chill temperature (°F)	Instant	-760	1580	32767	10	S
61	0x003C	Reserved						
62	0x003D	Heater temperature (°F)	Instant	-580	3020	32767	10	S
63	0x003E	Wind speed (mph)	Instant	0	1678	32767	10	S
64	0x003F		Min.					
65	0x0040		Max.					
66	0x0041		Avg.					
67	0x0042	Reserved						
68	0x0043	Wind speed (mph)	Raw	0	1678	32767	10	S
69	0x0044	Precipitation accumulation (in) (absolute) [3)]	Instant	0	25800 [4)]	65535	1000	U
70	0x0045	Precipitation accumulation (in) (differential) [5)]	Instant	0	39370	65535	10000	U

陕西威瑞仪器仪表有限公司 生产代理销售：实验检测设备 气象科学仪器设备
Tel:029-88186182 Web:www.qixiangzhan.cn Email:sxvery@163.com

Measurement range								
Reg. no	**Addr.**	**Quantity**		**Reg. min.**	**Reg. max.**	**Error value**	**SF [1)]**	**S/U [2)]**
71	0x0046	Precipitation intensity (in/h)	Instant	0	65530	65535	10000	U

1) *Scaling factor*
2) *Signed / Unsigned*
3) *Continuous accumulated value*
4) *Precipitation accumulation saturates to maximum value. Write 0x3247 to Modbus register address 0x0007 to reset the precipitation counters.*
5) *Accumulated value between 2 consecutive requests*

Table 64 Other measurement values

Measurement range								
Reg. no	**Addr.**	**Quantity**		**Reg. min**	**Reg. max**	**Error value**	**SF [1)]**	**S/U [2)]**
72	0x0047	Absolute humidity (g/m^3)	Instant	0	10000	32767	10	S
73	0x0048		Min.					
74	0x0049		Max.					
75	0x004A		Avg.					
76	0x004B	Mixing ratio (g/kg)	Instant	0	10000	32767	10	S
77	0x004C		Min.					
78	0x004D		Max.					
79	0x004E		Avg.					
80	0x004F	Abs. air pressure (hPa)	Instant	3000	12000	32767	10	S
81	0x0050		Min.					
82	0x0051		Max.					
83	0x0052		Avg.					
84	0x0053	Wind speed (km/h)	Instant	0	2700	32767	10	S
85	0x0054		Min.					
86	0x0055		Max.					
87	0x0056		Avg.					
88	0x0057	Reserved						

陕西威瑞仪器仪表有限公司 生产代理销售：实验检测设备 气象科学仪器设备
Tel:029-88186182 Web:www.qixiangzhan.cn Email:sxvery@163.com

		Measurement range						
Reg. no	**Addr.**	**Quantity**		**Reg. min**	**Reg. max**	**Error value**	**SF [1)]**	**S/U [2)]**
89	0x0058	Wind speed (knots)	Instant	0	1458	32767	10	S
90	0x0059		Min.					
91	0x005A		Max.					
92	0x005B		Avg.					
93	0x005C	Reserved						
94	0x005D	Wind speed (km/h)	Raw	0	2700	32767	10	S
95	0x005E	Wind speed (knots)	Raw	0	1458	32767	10	S
96	0x005F	Reserved						
97	0x0060	Reserved						
98	0x0061	Reserved						
99	0x0062	Wet bulb temp (°C)	Instant	-500	600	32767	10	S
100	0x0063	Wet bulb temp (°F)	Instant	-580	1400	32767	10	S
101	0x0064	Specific enthalpy (kJ/kg)	Instant	-1000	10000	32767	10	S
102	0x0065	Air density (kg/m^3)	Instant	0	3000	32767	1000	S
103	0x0066	Reserved						
104	0x0067	Reserved						
105	0x0068	Reserved						
106	0x0069	Reserved						
107	0x006A	Reserved						
108	0x006B	External temperature (°C)	Instant	-400	800	32767	10	S
109	0x006C	External temperature (°F)	Instant	-400	1760	32767	10	S
110	0x006D	Wind measurement quality (%)	Raw	0	100	65535	1	U
111	0x006E	Reserved						

陕西威瑞仪器仪表有限公司 生产代理销售：实验检测设备 气象科学仪器设备
Tel:029-88186182 Web:www.qixiangzhan.cn Email:sxvery@163.com

		Measurement range					
Reg. no	**Addr.**	**Quantity**	**Reg. min**	**Reg. max**	**Error value**	**SF [1]**	**S/U [2]**
112	0x006F	Reserved					

1) Scaling factor
2) Signed / Unsigned

B.2.3 Derived parameters and sampling

Table 65 Temperature

Temperature	Description	Update interval	Averaging period
Wet bulb temperature [°C] [°F]	Temperature of moist or icy surface exposed to air flow	1 ... 10 min	1 ... 10 min / 1 min steps Change in holding register address 0x0002
Dew point temperature [°C] [°F]	Dew or frost point temperature derived from air temperature, relative humidity	1 ... 10 min	1 ... 10 min / 1 min steps Change in holding register address 0x0002
Wind chill temperature [°C] [°F]	Derived from air temperature, relative humidity as defined by JAG/TI task force in 2001	1 ... 10 min	1 ... 10 min / 1 min steps Change in holding register address 0x0002

Table 66 Humidity

Humidity	Description	Update interval	Averaging period
Absolute humidity [g/m^3]	Mass of water vapor in a certain volume; derived from air temperature, relative humidity, pressure	1 ... 10 min	1 ... 10 min / 1 min steps Change in holding register address 0x0002
Mixing ratio [g/kg]	Mass mixing ratio derived from air temperature, relative humidity, pressure	1 ... 10 min	1 ... 10 min / 1 min steps Change in holding register address 0x0002

陕西威瑞仪器仪表有限公司 生产代理销售：实验检测设备 气象科学仪器设备
Tel:029-88186182 Web:www.qixiangzhan.cn Email:sxvery@163.com

Humidity	Description	Update interval	Averaging period
Specific enthalpy [kJ/kg]	Parameter of state of the humid in air. Specific enthalpy (heat capacity) is composed of the components of the mixture and related to the mass fraction of dry air at 0 Celsius.	1 ... 10 min	1 ... 10 min / 1 min steps Change in holding register address 0x0002

Table 67 Pressure

Pressure	Description	Update interval	Averaging period
Relative air pressure [hPa]	Derived from air temperature, relative humidity, pressure, and altitude	1 ... 10 min	1 ... 10 min / 1 min steps Change in holding register address 0x0000, 0x0002, 0x0003

Table 68 Air density

Air density	Description	Update interval	Averaging period
Air density [kg/m^3]	Indicates the amount of mass in a given volume of air	1 ... 10 min	1 ... 10 min / 1 min steps Change in holding register address 0x0002

Table 69 Precipitation

Precipitation	Description	Update interval	Averaging period
Precipitation quantity [mm] [in]	Absolute and differential values since the last measurement request	Event based	-

陕西威瑞仪器仪表有限公司 生产代理销售：实验检测设备 气象科学仪器设备
Tel:029-88186182 Web:www.qixiangzhan.cn Email:sxvery@163.com

B.2.4 Supported WXT536 analog inputs and sampling

Table 70 External analog inputs

External analog input	Description	Update interval	Averaging period
Global radiation [W/m²]	Thermopile pyranometer connected to WXT536 analog input	1 ... 10 min	1 ... 10 min / 1 min steps Change in holding register address 0x0005
External temperature [°C] [°F]	Pt1000 connected into WXT536 analog input		As in Pt1000 settings. See Analog input (page 135)

B.2.5 Wind measurement sampling

Table 71 Wind measurement sampling

Quantity	Qualifier	Update interval	Averaging period
Wind speed [m/s] [mph] [knots] [km/h]	Raw	1 sec	1 sec of 250 ms samples
	Instant	10 sec	10 sec of 1 sec raw samples
	Min./max.	1 ....10 min	10 sec instant of 1 sec raw samples as min./max. values during selected 1 ... 10 min wind averaging interval
	Average	1 ....10 min	1 ... 10 min / 1 min steps
Holding register 0x0004 averaging interval, wind	Wind averaging interval	On request	1 ... 10 min / 1 min steps

B.2.6 PTU measurement sampling

Table 72 PTU measurement

Quantity	Qualifier	Update interval	Averaging period
Air temperature [°C] [°F]	Instant	10 sec	Media filtered instant of 3 samples
	Min./Max.	1 ... 10 min	10 sec instants over average period
	Average		1 ... 10 min / 1 min steps Change in holding register address 0x0002

陕西威瑞仪器仪表有限公司 生产代理销售：实验检测设备 气象科学仪器设备
Tel:029-88186182 Web:www.qixiangzhan.cn Email:sxvery@163.com

Quantity	Qualifier	Update interval	Averaging period
Absolute air pressure [hPa]	Instant	10 sec	Media filtered 1 sec instant of 3 samples
	Min./Max.	1 ... 10 min	10 sec instants over average period
	Average		1 ... 10 min / 1 min steps Change in holding register address 0x0003
Relative air humidity [%RH]	Instant	10 sec	Media filtered 1 sec instant of 3 samples
	Min./Max.	1 ... 10 min	10 sec instants over average period
	Average		1 ... 10 min / 1 min steps Change in holding register address 0x0002

B.3 Diagnostics

The read device function code allows reading the identification and additional information relative to the physical and functional description of a remote device only.

B.3.1 Read device identification

The basic category includes mandatory objects: vendor name, product code, and software number. The regular and extended categories provide additional identification and an optional description.

Table 73 Read device identification

Object ID	Object name	Description	Category
0x00	Vendor name	`Vaisala`	Basic/M
0x01	Product code	`6U4B2P1A1A1B`	Basic/M
0x02	Software version	`3.85`	Basic/M
0x03	Vendor URL	`www.vaisala.com`	Regular/O
0x04	Product name	`WXT530`	Regular/O
0x80	Serial number	`L4320544`	Extended/O
0x82	Order code	`6U4B2P1A1A1B`	Extended/O

B.4 Function codes

For WXT530 Modbus communication, your system needs to support the following Modbus functions.

陕西威瑞仪器仪表有限公司 生产代理销售：实验检测设备 气象科学仪器设备
Tel:029-88186182 Web:www.qixiangzhan.cn Email:sxvery@163.com

Table 74 Function codes

Description	Function code
Read multiple holding registers	[3d]
Read input registers	[4d]
Write multiple holding registers	[16d]
Read device identification	[43d][14d]

B.5 Modbus configuration

You can change the following settings that affect Modbus operation with Vaisala WXT530 Configuration Tool:
- User port
- Modbus address
- Heating control

You can configure the settings for WXT536 analog inputs, such as global radiation and external temperature, only in the CLI mode or with Vaisala WXT530 Configuration Tool.

B.5.1 Updating WXT530 firmware

WXT530 must be in the CLI mode before the firmware update. CLI is the command line interface, such as ASCII, NMEA, and SDI-12. Firmware update is not possible in the Modbus mode.

1. Connect the WXT530 service cable to the USB port of your computer and to the WXT530 service connector.
2. To make sure that WXT530 is in the CLI mode, open the terminal software, such as Tera Term, with settings 19200, 8, N, 1 and type the command **?!**.

   If the sensor is in the CLI mode, the terminal program prints the sensor address.

   Alternatively, open Vaisala WXT530 Configuration Tool. If you can communicate with it, WXT530 is in the CLI mode. If not, see Changing from Modbus mode to CLI mode (page 187)
3. Start *WxtLoader.exe*.

陕西威瑞仪器仪表有限公司 生产代理销售：实验检测设备 气象科学仪器设备
Tel:029-88186182 Web:www.qixiangzhan.cn Email:sxvery@163.com

4. To change the serial port settings, select **Configuration**.
   - Select the COM port in use.
   - Select serial port settings: 19200, 8 bit, none, 1 bit.
5. When **Status** is **Connected to device**, select **Upload**.

   When **Upload status** is 100 %, the firmware update is completed.

To change to the Modbus mode, see Changing from CLI mode to Modbus mode (page 187). When WXT530 starts up in Modbus mode, communication with the terminal software is no longer possible.

B.5.2 Changing from CLI mode to Modbus mode

Before changing to the Modbus mode, save the settings with Vaisala Configuration Tool.

You can use Vaisala Configuration Tool (version 2.62 or newer) to change between the Modbus and ASCII protocol. Alternatively use a terminal software as follows.

1. Set the computer terminal software, such as Tera Term, communication parameters to **`19200 8N1`**.
2. Connect WXT530 service cable to the USB port of your computer and to WXT530 service connector.
3. In the terminal software, type the command **`?XU,M=M!`**.

WXT530 starts up in the Modbus mode. Communication with the terminal software is no longer possible.

B.5.3 Changing from Modbus mode to CLI mode

When you change from the CLI mode (ASCII, NMEA, SDI-12) to the Modbus mode, or the other way round, also the accumulated values are reset. The parameter ranges in the CLI mode are sometimes bigger than what is allowed in the Modbus mode. WXT530 enforces the narrower range when the device is turned to the Modbus mode.
The following settings are enabled when changing from the Modbus mode to the CLI mode:
- Wind measurement average is set to 1 s (**`aWU`**, `A=1`)
- Wind measurement interval is set to 1 s (**`aWU`**, `I=1`)
- Gust averaging time is set to 1s (**`aWU`**, `G=1`)
- PTU measurement interval is set to 10 s (**`aTU`**, `I=10`)
- Communication protocol is set to ASCII, polled, with CRC (**`aXU`**, `M=p`)

陕西威瑞仪器仪表有限公司 生产代理销售：实验检测设备 气象科学仪器设备
Tel:029-88186182 Web:www.qixiangzhan.cn Email:sxvery@163.com

1. Set the computer terminal software (such as Tera Term) communication parameters to **19200 8N1** and select and open a COM port in the terminal software.

   You can find the COM port reserved for the connected USB cable with Vaisala Instrument Finder provided with the drivers. The reserved COM ports are also listed in the **Ports** section of Windows Device Manager.

2. Connect WXT530 service cable to the WXT530 service connector.
3. Press **SPACE** within 15 seconds and keep it pressed down for 5 seconds.

   WXT530 starts in the CLI service port default mode (RS-232, ASCII polled with CRC, 19200, 8, N, 1).
4. To make sure that the CLI mode is activated, empty the RX buffer and query the address.
   a. To empty the RX buffer, type **!!!**.
   b. To query the address, type **?!**.

   If the device returns its address, it is in the CLI mode.
   If not, repeat from step 2.

Alternatively, you can change from the Modbus mode to the CLI mode by typing the value **0x0F** to register number 11 (0x000A). Another option is to use Vaisala Configuration Tool (version 2.62 or newer).

B.5.4 Changing port settings

You can change the port settings as needed, for example, you can change the baud rate, data bit, parity bit, or stop bit.

1. To change the port settings, change to the CLI mode. See Changing from Modbus mode to CLI mode (page 187).
2. To print the port settings, type **?XU!**.

   For more information, see Changing the communication settings (aXU) (page 76).
3. Change the required port settings.

   For example, to change the parity bit, type **?XU,P=E**.
4. To change back to the Modbus mode, see Changing from CLI mode to Modbus mode (page 187).

More information

- Configuration parameters (page 208)

陕西威瑞仪器仪表有限公司 生产代理销售：实验检测设备 气象科学仪器设备
Tel:029-88186182 Web:www.qixiangzhan.cn Email:sxvery@163.com

B.5.5 Changing Modbus address in CLI mode

You can use Vaisala Configuration Tool (version 2.62 or newer) to change between Modbus and ASCII protocol. Alternatively use a terminal software as follows.

1. To change the communication settings, change to the CLI mode.

   See Changing from Modbus mode to CLI mode (page 187).
2. To print the Modbus address, type **?XU,O!** in the terminal software.
3. Change the Modbus address.

   ```
   ?XU,O=1!
   ```
4. To change back to the Modbus mode, see Changing from CLI mode to Modbus mode (page 187).

B.5.6 Using Modbus with old WXT530

If you already have WXT530, you need an RS-485 connection to use the Modbus protocol. You can change the communication parameters with the Vaisala WXT530 Configuration Tool, or, by using WXT530 command line with a terminal software.



CAUTION! When you update to Modbus, WXT530 settings roll back to default settings. You can save WXT530 settings with Vaisala WXT530 Configuration Tool.

To use the Modbus protocol:

- Make sure the firmware is 3.85, or newer. If not, update the firmware.
  See Updating WXT530 firmware (page 186).
- Change from the CLI mode to the Modbus mode
  See Changing from CLI mode to Modbus mode (page 187).

If you want to return from the Modbus mode to the CLI mode, see Changing from Modbus mode to CLI mode (page 187).

陕西威瑞仪器仪表有限公司 生产代理销售：实验检测设备 气象科学仪器设备
Tel:029-88186182 Web:www.qixiangzhan.cn Email:sxvery@163.com

Appendix C. External sensors

C.1 Connecting ultrasonic level sensor to WXT536

Table 75 Ultrasonic level connections

	Level sensor connections		Ultrasonic level sensor
	Pin	**Pin function**	**Function**
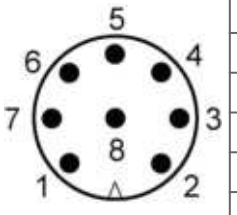	1	-	-
	2	-	-
	3	-	-
	4	AGND	Analog ground
	5	-	-
	6	-	-
	7	-	-
	8	WSIN Ultrasonic level sensor input+ AGND = - 0 ... 2.5 V 0 ... 5 V 0 ... 10 V	0 ... 2.5 V DC

After wiring the sensor cable and connecting it to WXT536, you can configure the analog input with Vaisala Configuration Tool.

To open the configuration window, select **Settings > Analog inputs**.

陕西威瑞仪器仪表有限公司 生产代理销售：实验检测设备 气象科学仪器设备
Tel:029-88186182 Web:www.qixiangzhan.cn Email:sxvery@163.com

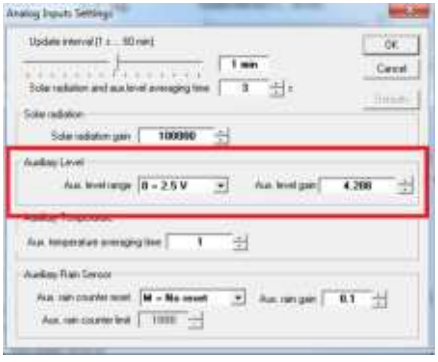

Figure 33 Ultrasonic level sensor settings

Set the following parameters:

- In **Aux. level range**, select **2.5 V**.
- In **Aux. level gain**, type **4.208** and select **OK**.

The Aux. level gain is defined as follows:

$$Aux.level\ gain = \frac{Max.measurementrange - Min.measurement}{Max.voltageoutput}$$

C.2 Connecting pyranometer to WXT536

The transmitter radiation shield reflects light. If you install the transmitter next to a pyranometer, the pyranometer can give incorrect measurements. Install the transmitter on the same level with the pyranometer so that the distance between the units is approximately 80 cm (31.5 in).

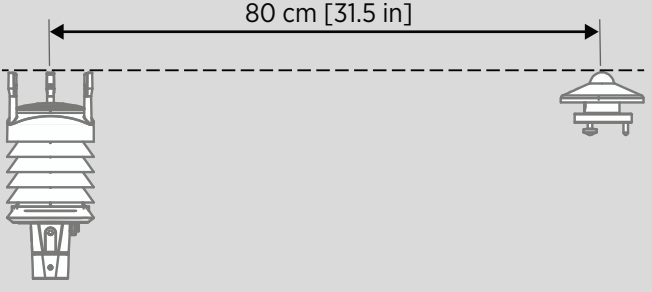

陕西威瑞仪器仪表有限公司 生产代理销售：实验检测设备 气象科学仪器设备
Tel:029-88186182 Web:www.qixiangzhan.cn Email:sxvery@163.com

Table 76 Pyranometer connections

	Solar radiation connections		Pyranometer
	Pin	**Pin function**	**Function**
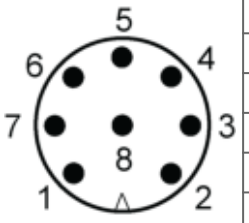	1	-	-
	2	-	-
	3	-	-
	4	-	-
	5	-	-
	6	SR+ Solar radiation sensor input + 0 ... 25 mV	Positive
	7	SR- Solar radiation sensor input -	Negative
	8	-	-

After wiring the sensor and connecting it to WXT536, you can configure the analog input through Vaisala Configuration Tool.

To open the configuration window, select **Settings > Analog inputs**.

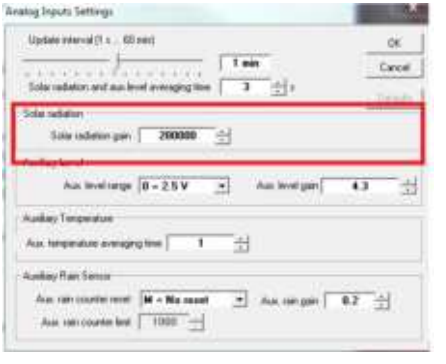

Figure 34 Solar radiation sensor setting in configuration tool

Average annual solar radiation arriving at the top of the Earth's atmosphere is roughly 1361 W/m^2. The sun's rays are attenuated as they pass through the atmosphere, leaving maximum normal surface irradiance at approximately 1000 W/m^2 at sea level on a clear day.

Typical measurement range of the solar sensor is approximately 0 ... 2000 W/m^2 but every sensor has a different sensitivity value. If the solar sensor sensitivity value is 5 µV/W/m^2, the solar radiation gain is:

陕西威瑞仪器仪表有限公司 生产代理销售：实验检测设备 气象科学仪器设备
Tel:029-88186182 Web:www.qixiangzhan.cn Email:sxvery@163.com

```
Solar radiation gain = 1 µV / 5µv/W/m² = 200 000 W/m²
```

In **Solar radiation gain**, type `200 000` and select **OK**.

In above example the WXT536 limits the maximum solar measurement output to 25 mV / 5 µv/W/m^2 = 5000 W/m^2, which is sufficient in normal outdoor use.

C.3 Connecting temperature sensor to WXT536

The following figure shows how to connect a temperature sensor (Pt1000) to the transmitter.

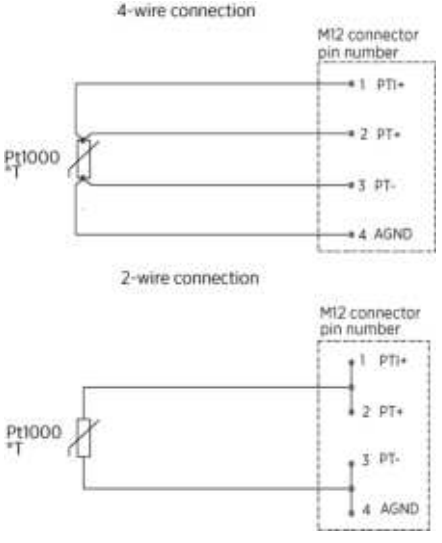

Figure 35 Connecting temperature sensor to WXT536

陕西威瑞仪器仪表有限公司 生产代理销售：实验检测设备 气象科学仪器设备
Tel:029-88186182 Web:www.qixiangzhan.cn Email:sxvery@163.com

Table 77 Wiring temperature sensor to WXT536

		Sensor connections
	Pin	**Pin function**
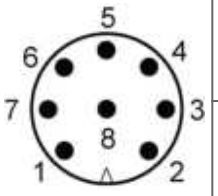	1	PTI+ Pt1000 measuring current Current feed
	2	PT+ Pt1000 input + Sense +
	3	PT- Pt1000 input - Sense -
	4	AGND Common ground for Pt1000
	5	-
	6	-
	7	-
	8	-

After wiring the sensor cable and connecting it to WXT536, you can configure the analog input with Vaisala Configuration Tool.

To open the configuration window, select **Settings > Analog inputs**.

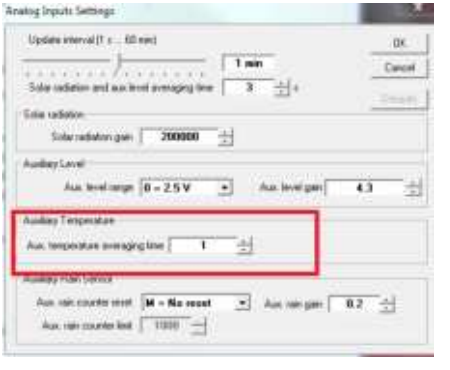

Figure 36 Temperature sensor setting

Set the **Aux. temperature averaging time** parameter.

陕西威瑞仪器仪表有限公司 生产代理销售：实验检测设备 气象科学仪器设备
Tel:029-88186182 Web:www.qixiangzhan.cn Email:sxvery@163.com

The **Aux. temperature averaging time** parameter defines the TM-Pt1000 temperature sensor measurement averaging time in seconds. It is defined as the length of the time window where WXT536 calculates the temperature average within the update interval window.

The following figure represents the temperature measurement averaging for measurement update interval (I) and averaging time (A).

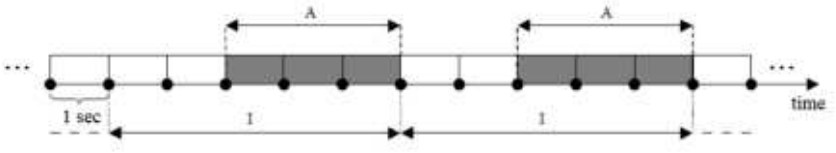

Figure 37 Update interval and averaging time interval

Type the value and select **OK**.

C.4 Connecting rain gauge to WXT536

Table 78 Rain gauge connections

Sensor connection			Rain gauge connection
	Pin	**Pin function**	**Function**
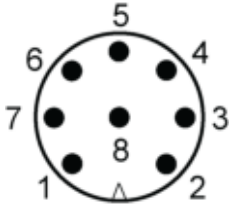	1	-	-
	2	-	-
	3	-	-
	4	AGND	Normally open contact
	5	TIP IN	Normally open contact
	6	-	-
	7	-	-
	8	-	-

Only the heated rain gauge has terminals 4, 5, and 6 for the heating power. You may need a separate power box for a heated rain gauge.

After wiring the sensor and connecting it to WXT536, you can configure the analog input through Vaisala Configuration Tool.

To open the configuration window, select **Settings > Analog inputs**.

陕西威瑞仪器仪表有限公司 生产代理销售：实验检测设备 气象科学仪器设备
Tel:029-88186182 Web:www.qixiangzhan.cn Email:sxvery@163.com

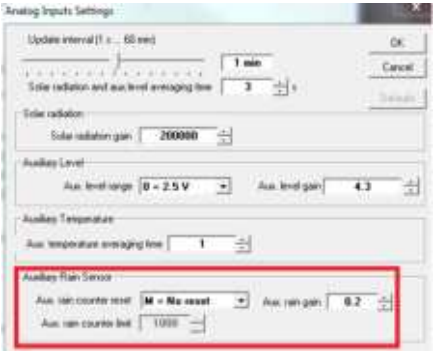

Figure 38 Rain sensor setting

陕西威瑞仪器仪表有限公司 生产代理销售：实验检测设备 气象科学仪器设备
Tel:029-88186182 Web:www.qixiangzhan.cn Email:sxvery@163.com

Appendix D. SDI-12 protocol

SDI-12 is a standard for interfacing data recorders with microprocessor-based sensors. The name stands for serial/digital interface at 1200 baud. More information of the complete SDI-12 standard text is available from the SDI-12 website: http://www.sdi-12.org.

D.1 SDI-12 electrical interface

The SDI-12 electrical interface uses the SDI-12 bus to transmit serial data between SDI-12 data recorders and sensors. The SDI-12 bus is the cable that connects multiple SDI-12 devices. The cable has three conductors:

- Serial data line
- Ground line
- 12 V line

The SDI-12 bus can have at least 10 sensors connected to it. The bus topology is a parallel connection, where each of the three wires of different sensors are connected in parallel.

D.1.1 SDI-12 communications protocol

SDI-12 data recorders and sensors communicate by an exchange of ASCII characters on the data line. The data recorder sends a break to wake up the sensors on the data line. A break is continuous spacing on the data line for at least 12 milliseconds. The data recorder then sends a command. The sensor, in turn, returns the appropriate response. Each command is for a specific sensor. The first character of each command is a unique sensor address that specifies with which sensor the recorder wants to communicate. Other sensors on the SDI-12 bus ignore the command and return to low-power standby mode. When a data recorder tells a sensor to start its measurement procedure, the recorder does not communicate with any other sensor until the data collection from the first sensor is complete.

A typical recorder/sensor measurement sequence proceeds in the following order:

- The data recorder wakes all sensors on the SDI-12 bus with a break.
- The recorder transmits a command to a specific, addressed sensor, instructing it to make a measurement.
- The addressed sensor responds within 15.0 ms returning the maximum time until the measurement data is ready and the number of data values it returns.
- If the measurement is immediately available, the recorder transmits a command to the sensor instructing it to return the measurement(s). If the measurement is not ready, the data recorder waits for the sensor to send a request to the recorder, which indicates that the data is ready. The recorder then transmits a command to get the data.
- The sensor responds, returning one or more measurements.

D.1.2 SDI-12 timing

The following figure shows a timing diagram for a SDI-12 command and its response. The tolerance for all SDI-12 timing is ±0.40 ms.

陕西威瑞仪器仪表有限公司 生产代理销售：实验检测设备 气象科学仪器设备
Tel:029-88186182 Web:www.qixiangzhan.cn Email:sxvery@163.com

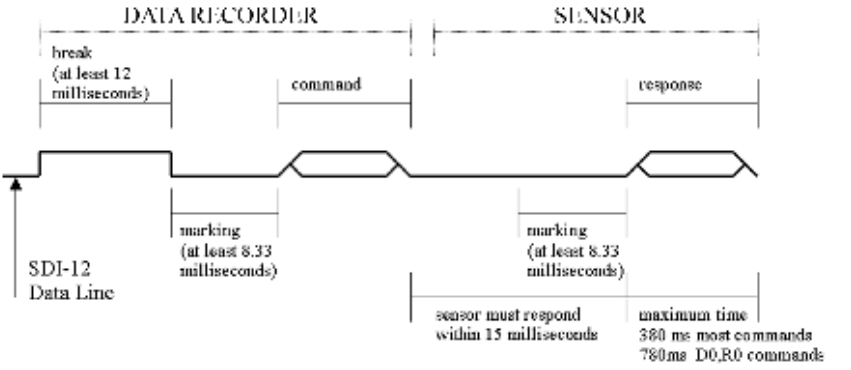

Figure 39 Timing diagram

The exception to this is the time between the stop bit of one character and the start bit of the next character. The maximum time for this is 1.66 ms, with no tolerance.

- A data recorder transmits a break by setting the data line to spacing for at least 12 ms.
- The sensor does recognize a break condition for a continuous spacing time of less than 6.5 ms. The sensor will always recognize a break when the line is continuously spacing for more than 12 ms.
- When receiving a break, a sensor must detect 8.33 ms of marking on the data line before it looks for an address.
- A sensor must wake up from a low-power standby mode and be capable of detecting a start bit from a valid command within 100 ms after detecting a break.
- After a data recorder transmits the last character of a command, it must relinquish control of the data line within 7.5 ms.
- After receiving the break and the command, the addressed sensor sets the data line to marking at 8.33 ms and then sends the response (tolerance: -0.40 ms). The start bit of the first response byte must start within 15 ms after the stop bit of the last byte of the command (tolerance: +0.40 ms).
- After a sensor transmits the last character of a response, it must relinquish control of the data line within 7.5 ms (tolerance: +0.40 ms).
- No more than 1.66 ms of marking are allowed between the end of the stop bit and the start bit (for example between characters) on any characters in the command or the response (no tolerance.) This permits a response to an M command to be sent within a 380 ms window.
- Sensors must return to a low-power standby mode after receiving an invalid address or after detecting a marking state on the data line for 100 ms (tolerance: +0.40 ms).
- When a recorder addresses a different sensor, or if the data line has been in the marking state for more than 87 ms, the next command must be preceded by a break.

The low-power standby mode, in addition to being a low-power consumption state, is a protocol state and it takes a moment to leave that state.

陕西威瑞仪器仪表有限公司 生产代理销售：实验检测设备 气象科学仪器设备
Tel:029-88186182 Web:www.qixiangzhan.cn Email:sxvery@163.com

Appendix E. CRC-16 computation

The computation of the CRC is performed on the data response before parity is added. All operations are assumed to be on 16-bit unsigned integers. The least significant bit is on the right. Numbers preceded by 0x are in hexadecimal. All shifts shift in a zero. The algorithm is:

```
Initialize the CRC to zero. For each character beginning with the address, up
to but not including the carriage return (<cr>), do as follows:
{
  Set the CRC equal to the exclusive OR of the character and itself
  for count =1 to 8
  {
    if the least significant bit of the CRC is one
    {
        right shift the CRC one bit set
        CRC equal to the exclusive OR of 0xA001 and
        itself
    }
    else
    {
      right shift the CRC one bit
    }
  }
}
```

E.1 Encoding CRC as ASCII characters

The 16-bit CRC is encoded to 3 ASCII characters by using the following algorithm:

1st character = 0x40 OR (CRC shifted right 12 bits)

2nd character = 0x40 OR ((CRC shifted right 6 bits) AND 0x3F)

3rd character = 0x40 OR (CRC AND 0x3F)

The 3 ASCII characters are placed between the data and <cr><lf>. Parity is applied to all 3 characters, if selected for the character frame.

The CRC computation code is added to the end of the response, if the first letter of the command is sent by using lower case.

E.2 NMEA 0183 v3.0 checksum computation

The checksum is the last field in the NMEA sentence and follows the checksum delimiter character "*". It is the 8-bit exclusive OR of all characters in the sentence, including "," and "^" delimiters, between but not including the "$" or "!" and the "*" delimiters. The hexadecimal value of the most significant and least significant four bits of the result is converted to two ASCII characters (0-9,A-F) for transmission. The most significant character is transmitted first.

陕西威瑞仪器仪表有限公司 生产代理销售：实验检测设备 气象科学仪器设备
Tel:029-88186182 Web:www.qixiangzhan.cn Email:sxvery@163.com

Appendix F. Wind measurement averaging method

The following figures represent the wind measurement averaging for different selections of communication protocol, wind measurement update interval (I), and averaging time (A). Scalar averaging is used for both wind speed and wind direction.

The gray boxes indicate that the measurement is in progress during the corresponding second.
An update (= internal calculation) is always made at the end of the update interval.
In the autosending protocols (ASCII automatic (+ CRC) and NMEA automatic) outputting the data messages is synchronized to take place immediately after the update.
In ASCII polled (+ CRC), NMEA query, and SDI-12 continuous measurement protocols trying to request data before the update interval is completed results in getting the data from the previous completed update interval.
The wind measurement sampling rate (4, 2, or 1 Hz) does not have any effect on the averaging scheme. It determines from how many samples the 1-second values seen in the figures are calculated.

陕西威瑞仪器仪表有限公司 生产代理销售：实验检测设备 气象科学仪器设备
Tel:029-88186182 Web:www.qixiangzhan.cn Email:sxvery@163.com

Case 1 I > A, all communication protocols other than SDI-12 (aXU,M=S). In this example I=5 sec and A=3 sec.

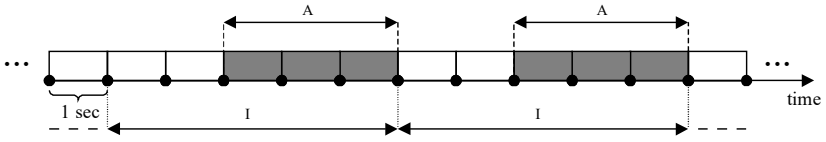

Case 2 I < A, all communication protocols other than SDI-12 (aXU,M=S). In this example I=2 sec and A=5 sec.

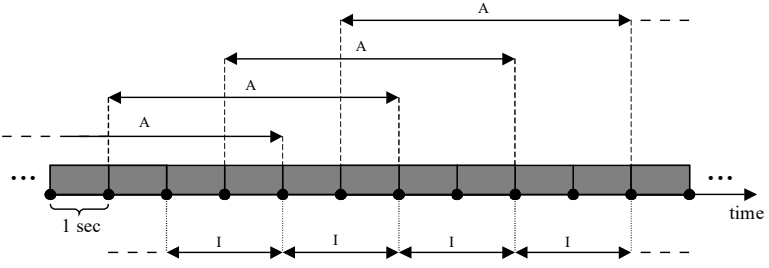

Case 3 Communication protocol SDI-12 (aXU,M=S). In this example A=3 sec. I does not have any function in this protocol.

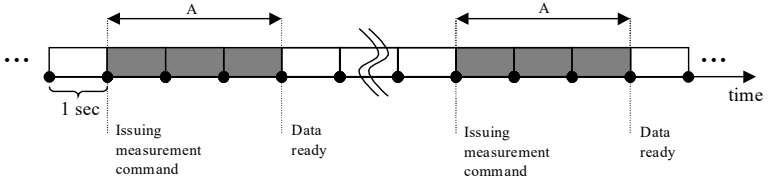

Figure 40 Wind measurement averaging method

陕西威瑞仪器仪表有限公司 生产代理销售：实验检测设备 气象科学仪器设备
Tel:029-88186182 Web:www.qixiangzhan.cn Email:sxvery@163.com

Appendix G. Factory configurations

The factory configurations are read-only settings which cannot be modified. For each settings command, the following information is shown:

- Command to retrieve the settings (ends to ! character)
- Example response from the transmitter
- Table describing the message contents

G.1 General unit settings

```
0XF!0XF,f=11111111&11100010,o=AAC1DB1A,c=A263,
i=HEL___,n=A3430012,2=2528,3=3512 <cr><lf>
```

Table 79 General unit settings

Field character	Field name	Description
f	Factory options	Selection of parameters
o	Order code	Ordering identity as delivered (10 characters)
c	Calibration date	Y = 2003, A, B, ... = 2005, 2006, 1 ... 52 = week, 1 ... 7, weekday
i	Info	Factory signature (10 characters)
n	Device s/n	A ,B , ... = 2005, 2006 ..., 1 ... 52 = week, 1 ... 7 = weekday , 1 ... 9999 = serial number
2	2.5 V reference	2500 mV (default)
3	3.5 V reference	3500 mV (default)

G.2 Wind configuration settings

```
0WF!
0WF,g=A,l=N,t=A,0=273.00,1=273.01,2=273.00,3=273.00,4=273.00,5=273.00,a=45.1,b=
50.2,u=54.9,v=63.1,x=65.1,y=65.1<cr><l f>
```


陕西威瑞仪器仪表有限公司 生产代理销售：实验检测设备 气象科学仪器设备
Tel:029-88186182 Web:www.qixiangzhan.cn Email:sxvery@163.com

Table 80 Wind configuration settings

Field character	Field name	Description
g	Strategy	A = All N = North E = East S = South
l	Pulse length	N = Normal, auto A = Adjusted on half S = Short E = Extended T = Test
t	Single transducer mode	A = All N = North E = East S = South
0..5	Zero adjustment	1 ... 655.35 us (default 273.00 us)
a, b	Detect level btw. N and E	0 ... 100 % (default 70 %)
u, v	Detect level btw. E and S	0 ... 100 % (default 70 %)
x, y	Detect level btw. S and N	0 ... 100 % (default 70 %)

G.3 PTU configuration settings

```
0TF!0TF,n=A0430432 <cr><lf>
```

Table 81 PTU configuration settings

Field character	Field name	Description
n	PTU serial number	A, B, ... = 2005, 2006... 1 ... 52 = week 1 ... 7 = weekday 1 ... 9999 = serial number

G.4 Rain configuration settings

```
0RF!0RF,p=1.0,n=3.0,d=N,f=0<cr><lf>
```


陕西威瑞仪器仪表有限公司 生产代理销售：实验检测设备 气象科学仪器设备
Tel:029-88186182 Web:www.qixiangzhan.cn Email:sxvery@163.com

Table 82 Rain configuration settings

Field character	Field name	Description
p, n	Positive and negative gain	0.1 ... 25.5 (p = 1.0, n = 1.0)
d	Bypass all hits	Y = Enabled, N = Disabled (default)
f	Wind filter bypass	0, 1 ... 4 (0 = wind depended 1, 2, 3,4 = threshold level)

G.5 Supervisor settings

```
0SF!0SF,t=19.8,b=17159,l=-4.0,m=0.0,h=4.0<cr><lf>
```

Table 83 Supervisor settings

Field character	Field name	Description
t	CPU temperature calibration temperature	°C
b	Direct ADC value of CPU temperature diode	0 ... 4096
l	Heater control gain	-100.0 ...[m] °C (default -4.0 °C)
m	Heating set point	°C
h	Not used	

陕西威瑞仪器仪表有限公司 生产代理销售：实验检测设备 气象科学仪器设备
Tel:029-88186182 Web:www.qixiangzhan.cn Email:sxvery@163.com

Appendix H. Complete set of accessories

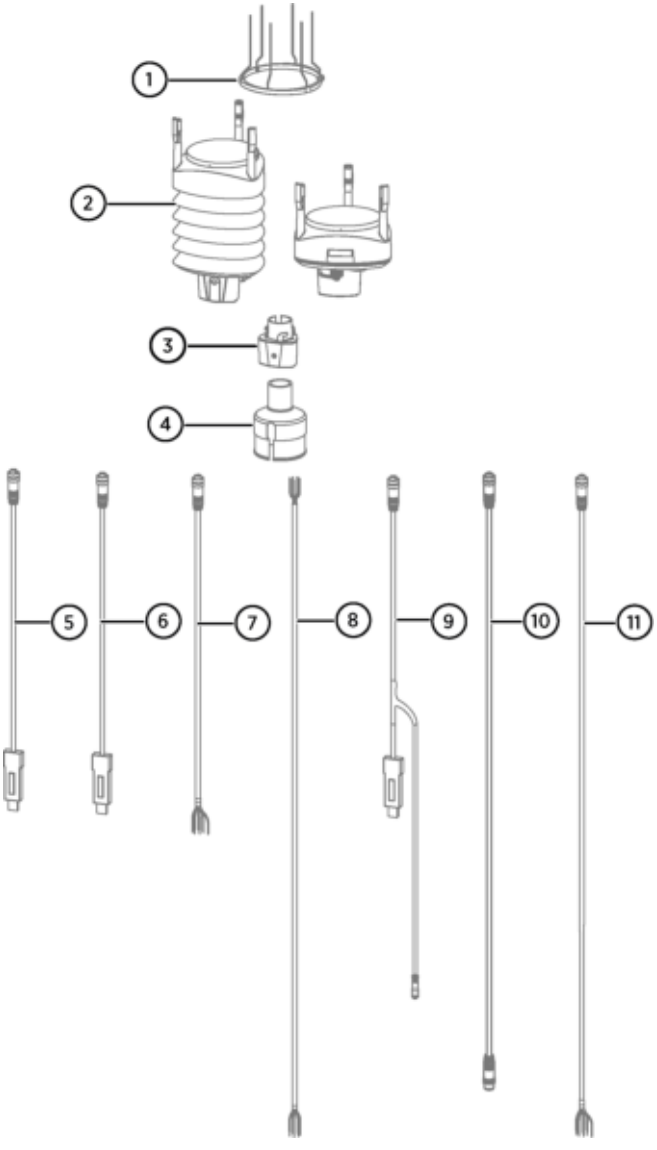

Figure 41 Complete set of accessories

陕西威瑞仪器仪表有限公司 生产代理销售：实验检测设备 气象科学仪器设备
Tel:029-88186182 Web:www.qixiangzhan.cn Email:sxvery@163.com

1 Bird kit (212793)
2 WXT530 series transmitter
3 Mounting kit (212792)
4 Mounting accessory between mounting kit and 60 mm tube (WMSFIX60)
5 Cable USB RS-232/RS-485 1.4 m USB M12 (220782)
6 USB service cable delivered with Vaisala Configuration Tool (220614)
7 Cable 2 m shielded 8-pin M12 (222287)
8 Cable 40 m shielded 12-pin, open end wires (217020)
9 Cable USB with power supply RS-232 / 485 USB/M12SP / 100-240 V AC (263193SP)
10 Cable 10 m shielded 8-pin M12 connectors on both ends (CBL210679)
11 Cable 50 m shielded 8-pin M12, open end wires (245931)

The following figure shows how to connect surge protector WSP150 to WXT536.

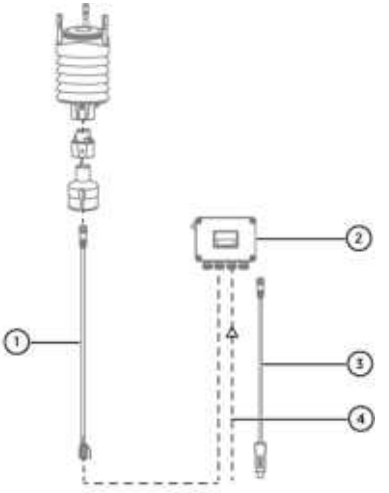

Figure 42 WXT536 with surge protector WSP150

1 Cable with open leads (222287 or 222288)
2 WSP150 surge protector
3 Data output cable
4 Operating and heating powers

陕西威瑞仪器仪表有限公司 生产代理销售：实验检测设备 气象科学仪器设备
Tel:029-88186182 Web:www.qixiangzhan.cn Email:sxvery@163.com

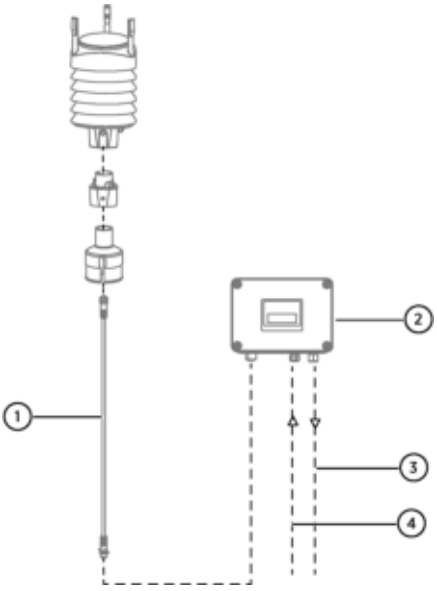

Figure 43 WXT536 with surge protector WSP152

1 Cable with connectors on both ends (CBL210679)
2 WSP152 surge protector
3 USB cable (220782)
4 Operating and heating power

陕西威瑞仪器仪表有限公司 生产代理销售：实验检测设备 气象科学仪器设备
Tel:029-88186182 Web:www.qixiangzhan.cn Email:sxvery@163.com

Appendix I. Configuration parameters

Table 84 General parameters

Parameter	Factory	Range	Info	Command
Supervisor settings	Order option defined*	1 = Th Heating temperature	Format:1111000011000000 The first 8 are for combined data message and the last 8 for composite data message. 1 = Data is on 0 = Data is off Note that you write the parameter format 1111000011000000 but the unit answers: 11110000&11000000 * For the heated unit the factory setting is 1111000011000000 and for the non-heated unit 0000000000000000	**SU,R**
		1 = Vh Heating voltage		
		1 = Vs Supply voltage		
		1 = Vr 3.5 V reference voltage		
		1 = Id Information field		
		0 = Reserved		
		0 = Reserved		
		0 = Reserved [& = Delimiter]		
		1 = Th Heating temperature		
		1 = Vh Heating voltage		
		0 = Vs Supply voltage		
		0 = Vr 3.5 V reference voltage		
		0 = Id Information field		
		0 = Reserved		
		0 = Reserved		
		0 = Reserved		
Device address	0	0 ... 9, A. ... Z, a ... z	Address identifier	**XU,A**

陕西威瑞仪器仪表有限公司 生产代理销售：实验检测设备 气象科学仪器设备
Tel:029-88186182 Web:www.qixiangzhan.cn Email:sxvery@163.com

Parameter	Factory	Range	Info	Command
Protocol selection	Order option defined	A = ASCII, automatic a = ASCII, automatic with CRC P = ASCII, polled p = ASCII, polled with CRC N = NMEA, automatic Q = NMEA, query S = SDI-12, R R = SDI, continuous measurement M = Modbus RTU		**XU,M**
Test message	0		For test purposes	**XU,T**
Serial interface	Order option defined	1 = SDI-12 2 = RS-232 3 = RS-485 4 = RS-422	Note that RS-422 hardware is wired differently inside the unit.	**XU,C**
Repeat interval in seconds	0	0 ... 3600 seconds		**XU,I**
Baud rate	Order option defined	1200, 2400, 4800, 9600, 19200, 38400, 57600, 115200 bauds		**XU,B**
Data bits	Order option defined	7, 8		**XU,D**
Parity	Order option	O = Odd E = Even N = None		**XU,P**
Stop bits	Order option defined	1, 2		**XU, S**
RS-485 delay	25	0 ... 10000 ms		**XU,L**
Device name	Order option defined	WXT531 ... WXT536	Read-only	**XU,N**
Software version	3.xx	3.xx	Read-only	**XU,V**

陕西威瑞仪器仪表有限公司 生产代理销售：实验检测设备 气象科学仪器设备
Tel:029-88186182 Web:www.qixiangzhan.cn Email:sxvery@163.com

Table 85 Pressure, temperature and humidity parameters

Parameter	Factory	Range	Info	Command
PTU data controls	Order option defined	1 = Pa Air pressure	Format:1101000011010000 The first 8 are for combined data message and the last 8 for composite data message. 1 = Data is on 0 = Data is off Note that you write the parameter format: 1101000011010000 but the unit answers 11010000&11010000.	**TU,R**
		1 = Ta Air temperature		
		0 = Tp internal temperature		
		1 = Ua Air humidity		
		0 = Reserved		
		0 = Reserved		
		0 = Reserved		
		0 = Reserved [& = Delimiter]		
		1 = Pa Air pressure		
		1 = Ta Air temperature		
		0 = Tp internal temperature		
		1 = Ua Air humidity		
		0 = Reserved		
		0 = Reserved		
		0 = Reserved		
		0 = Reserved		
PTU update interval	60	1 ... 3600 seconds		**TU,I**
Pressure unit	H	H = hPa P = Pascal B = bar I = inHg		**TU,P**
Temperature unit	C	C = Celsius F = Fahrenheit		**TU,T**

陕西威瑞仪器仪表有限公司 生产代理销售：实验检测设备 气象科学仪器设备
Tel:029-88186182 Web:www.qixiangzhan.cn Email:sxvery@163.com

Table 86 Wind parameters

Parameter	Factory	Range	Info	Command
Wind data controls	Order option defined	1 = Dn Direction minimum	Format:11111100001001000 The first 8 are for combined data message and the last 8 for composite data message. 1 = Data is on 0 = Data is off Note that you write the parameter format 1111110001001000 but the unit answers 11111100&01001000.	**WU,R**
		1 = Dm Direction average		
		1 = Dx Direction maximum		
		1 = Sn Speed minimum		
		1 = Sm Speed average		
		1 = Sx Speed maximum		
		0 = Reserved		
		0 = Reserved [& = Delimiter]		
		0 = Dn Direction minimum		
		1 = Dm Direction average		
		0 = Dx Direction maximum		
		0 = Sn Speed minimum		
		1 = Sm Speed average		
		0 = Sx Speed maximum		
		0 = Reserved		
		0 = Reserved		
Wind update interval	5	1 ... 3600 seconds		**WU,I**
Wind averaging time	3	1 ... 3600 seconds		**WU,A**
Wind speed calculation mode	1	1 = Max./min. calculation 3 = Gust/lull calculation		**WU,G**
Wind speed unit	M	M = m/s K = km/h S = mph N = knots		**WU,U**
Wind direction offset	0	-180 ... 180		**WU,D**

陕西威瑞仪器仪表有限公司 生产代理销售：实验检测设备 气象科学仪器设备
Tel:029-88186182 Web:www.qixiangzhan.cn Email:sxvery@163.com

Parameter	Factory	Range	Info	Command
NMEA format	W	T = XDR W = MWV		**WU,N**
Sampling rate	4	1, 2, 4 Hz		**WU,F**

Table 87 Precipitation parameters

Parameter	Factory	Range	Info	Command
Precipitation data controls		1 = Rc Rain amount	Format:1111110010000000 The first 8 are for combined data message and the last 8 for composite data message. 1 = Data is on 0 = Data is off Note that you write the parameter format 1111110010000000 but the unit answers 11111100&10000000.	**RU,R**
		1 = Rd Rain duration		
		1 = Ri Rain intensity		
		1 = Hc Hail amount		
		1 = Hd Hail duration		
		1 = Hi Hail intensity		
		1 = Rp Rain peak		
		1 = Rp Hail peak [& = Delimiter]		
		1 = Rc Rain amount		
		1 = Rd Rain duration		
		1 = Ri Rain intensity		
		1 = Hc Hail amount		
		1 = Hd Hail duration		
		1 = Hi Hail intensity		
		1 = Rp Rain peak		
		1 = Rp Hail peak		
Precipitation update interval	60	1 ... 3600 seconds		**RU,I**
Precipitation unit	M	M = metric (mm, s, mm/h) I = imperial (in, s, in/h)		**RU,U**

陕西威瑞仪器仪表有限公司 生产代理销售：实验检测设备 气象科学仪器设备
Tel:029-88186182 Web:www.qixiangzhan.cn Email:sxvery@163.com

Table 88 Auxiliary sensor parameters

Parameter	Factory	Range	Info	Command
Auxiliary sensor controls	Order option defined	1 = Tr pt1000 temperature	Format: 1111100011111000 The first 8 are for combined data message and the last 8 for composite data message. 1 = Data is on 0 = Data is off Note that you write the parameter format 1111100011111000 but the unit answers 11111000&11111000 Note that Analog output mode is never set when external sensors are in use.	**IU,R**
		1 = Ra Aux. rain amount		
		1 = Sl Ultrasonic level sensor		
		1 = Sr Solar radiation		
		1 = Rt pt1000 resistance		
		0 = Reserved		
		1 = Analog output mode*		
		0 = Reserved [& = Delimiter]		
		1 = Tr pt1000 temperature		
		1 = Ra Aux. rain amount		
		1 = Sl Ultrasonic level sensor		
		1 = Sr Solar radiation		
		1 = Rt pt1000 resistance		
		0 = Reserved		
		0 = Reserved		
		0 = Reserved		
Auxiliary sensor update interval	60	0.5 ... 3600 seconds		**IU,I**
Auxiliary sensor averaging time	3	0.25 ... 3600 seconds		**IU,A**
Auxiliary rain sensor gain	0.2	0.000000001 ... 1000000		**IA,G**

陕西威瑞仪器仪表有限公司 生产代理销售：实验检测设备 气象科学仪器设备
Tel:029-88186182 Web:www.qixiangzhan.cn Email:sxvery@163.com

Parameter	Factory	Range	Info	Command
Reset mode (cumulative rain amount resetting)	M	M = resets rain when pulse amount exceeds 65535. When gain is 0.2, it resets at 65536*0.2 = 13107 (mm) L = resets when reaching limit value A = Cumulative rain value is reset every time rain information is sent out from transmitter (user counts cumulative rain amount).		**IA,M**
Rain reset limit	1000	0.000000001 ... 1000000		**IA,L**
Auxiliary solar sensor gain	100000	0.000000001 ... 1000000		**IB,G**
Auxiliary level sensor gain	1	0.000000001 ... 1000000		**IS,G**
Auxiliary level sensor operating range	1	0 = 0 ... 2.5 V 1 = 0 ... 5.0 V 2 = 0 ... 10.0 V		**IS,M**
Auxiliary temperature averaging	1	0.5 ... 3600		**IP,A**

陕西威瑞仪器仪表有限公司 生产代理销售：实验检测设备 气象科学仪器设备
Tel:029-88186182 Web:www.qixiangzhan.cn Email:sxvery@163.com

Table 89 Analog mA output parameters

Parameter	Factory	Range	Info	Command
Auxiliary sensor definitions	Order option defined	1 = Tr pt1000 temperature	Format: 0000001000000000 1 = mA output is in use 0 = mA output is off Note that you write the parameter format 0000001000000000 but the unit answers 00000010&00000000 Note that the analog output mode is used only inWXT532 with the mA output option.	**IU,R**
		1 = Ra Aux. rain amount		
		1 = Sl Ultrasonic level sensor		
		1 = Sr Solar radiation		
		1 = Rt pt1000 resistance		
		0 = Reserved		
		1 = Analog output mode		
		0 = Reserved [& = Delimiter]		
		1 = Tr pt1000 temperature		
		1 = Ra Aux. rain amount		
		1 = Sl Ultrasonic level sensor		
		1 = Sr Solar radiation		
		1 = Rt pt1000 resistance		
		0 = Reserved		
		0 = Reserved		
		0 = Reserved		
Wind speed gain	Order option defined	0.000000001 ... 1000000	4 ... 20 mA = 0.266667 (20 mA = 60 m/s) 0..20 mA = 0.333333 (20 mA = 60 m/s)	**SU,a**
Wind speed offset	Order option defined	0 ... 24	4 ... 20 mA = 4	**SU,b**
			0 ... 20 mA = 0	
Wind speed minimum	0	0 ... 24	4 ... 20 mA = 0	**SU,c**
			0 ... 20 mA = 0	
Wind speed maximum	20	0 ... 24	4 ... 20 mA = 20	**SU,d**
			0 ... 20 mA = 20	
Wind speed error indication	22	0 ... 24	4 ... 20 mA = 22	**SU,e**
			0 ... 20 mA = 22	

陕西威瑞仪器仪表有限公司 生产代理销售：实验检测设备 气象科学仪器设备
Tel:029-88186182 Web:www.qixiangzhan.cn Email:sxvery@163.com

Parameter	Factory	Range	Info	Command
Wind direction gain	Order option defined	0.000000001 ... 1000000	4 ... 20 mA = 0.044444	**SU,f**
			0 ... 20 mA = 0.055556	
Wind direction offset	Order option defined	0 ... 24	4 ... 20 mA = 4	**SU,g**
			0 ... 20 mA = 0	
Wind direction minimum	0	0 ... 24	4 ... 20 mA = 0	**SU,h**
			0 ... 20 mA = 0	
Wind direction maximum	20	0 ... 24	4 ... 20 mA = 20	**SU,j**
			0 ... 20 mA = 20	
Wind direction error indication	22	0 ... 24	4 ... 20 mA = 22	**SU,k**
			0 ... 20 mA = 22	

陕西威瑞仪器仪表有限公司 生产代理销售：实验检测设备 气象科学仪器设备
Tel:029-88186182 Web:www.qixiangzhan.cn Email:sxvery@163.com

Appendix J. DNV certificate

DNV

TYPE APPROVAL CERTIFICATE

Certificate No:
TAA00000VF
Revision No:
2

This is to certify:

That the Bridge instrumentation

with type designation(s)
Weather Transmitter WXT530 Series

Issued to
Vaisala Oyj
Vantaa, Finland

is found to comply with
IEC 60945 Ed. 4 (2002-08) Maritime navigation and radiocommunication equipment and systems – General requirements – Methods of testing and required test results

Application :

Weather Transmitter WXT530 Series for Precipitation, Pressure, Temperature, Humidity, Wind Speed, Wind Direction, according to model, see page 2.

Issued at **Høvik** on **2022-03-16**

This Certificate is valid until **2027-03-15** .
DNV local unit: **Helsinki FIS**

Approval Engineer: **Frederik Tore Elter**

for **DNV**
Digitally Signed By: Sjåvåg, Trond
Location: DNV Høvik, Norway

Trond Sjåvåg
Head of Section

This Certificate is subject to terms and conditions overleaf. Any significant change in design or construction may render this Certificate invalid.
The validity date relates to the Type Approval Certificate and not to the approval of equipment/systems installed.

LEGAL DISCLAIMER: Unless otherwise stated in the applicable contract with the holder of this document, or following from mandatory law, the liability of DNV AS, its parent companies and their subsidiaries as well as their officers, directors and employees ("DNV") arising from or in connection with the services rendered for the purpose of the issuance of this document or reliance thereon, whether in contract or in tort (including negligence), shall be limited to direct losses and under any circumstance be limited to 300,000 USD.

陕西威瑞仪器仪表有限公司 生产代理销售：实验检测设备 气象科学仪器设备
Tel:029-88186182 Web:www.qixiangzhan.cn Email:sxvery@163.com

Appendix K. Recycling instructions

These recycling instructions guide you on the end-of-life treatment of this Vaisala product. As waste regulations and infrastructure vary in each country, these instructions only indicate the different components to be separated and common ways to handle them. Always follow local requirements when disposing of the product. Vaisala encourages to use the best available recycling practices to minimize related environmental impacts.

Vaisala is committed to meeting the requirements of the EU Waste Electrical and Electronic Equipment (WEEE) Directive. This directive aims to minimize the impact of electrical and electronic goods on the environment, by increasing reuse and recycling, and reducing the amount of WEEE going to landfill. This symbol indicates that the product should be collected separately from other waste streams and treated appropriately.



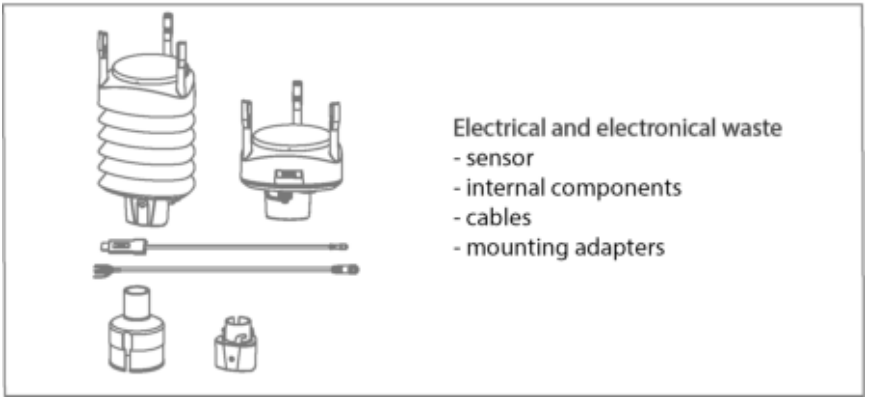

陕西威瑞仪器仪表有限公司 生产代理销售：实验检测设备 气象科学仪器设备
Tel:029-88186182 Web:www.qixiangzhan.cn Email:sxvery@163.com

Index

Symbols
sign....149

A
abbreviations....82
accessories....15, 22, 205
  bird kit....26
  mounting kit....24
  order codes....166
  surge protector....25
  USB cable....23
  Vaisala Configuration Tool....27
accumulated rainfall....31, 134
AC range....53
address query....92
air humidity....122
air pressure....122
air temperature....122
air terminal....35
aligning....46, 48
alignment direction indicator, *see* North arrow
ambient temperature....33
analog input....17
  connector pin....135
  enabling/disabling....137
  interface....34
  signal name....135
analog output....141
  enabling/disabling....144
  interface....34
  operation....141
  scaling....142
  wind direction channel....143
  wind speed channel....143
AOUT1 / AOUT2....141, 142
ASCII....82, 169
  protocol....90
autosend mode....129
Aux rain....139
averaging time....135, 138, 141

B
backward compatibility....28
BAROCAP....32
bird kit....26, 205
bits
  precipitation parameters....126
  PTU parameters....122
  wind parameters....117
bushing and grounding kit....20, 45

C
cable gland....20, 53
cables....205
  connectors....70
  order codes....70
  USB RS-232/RS-485....23
  USB service cable....23, 71
  Vaisala USB cable....50
changing
  averaging time....119
  communication settings....76
  data message....119
  device address....93
  direction offset....119
  Modbus address....189
  NMEA wind formatter....119
  settings....124, 129, 133
  speed unit....119
  update interval....119
  wind speed....119
cleaning....145

陕西威瑞仪器仪表有限公司 生产代理销售：实验检测设备 气象科学仪器设备
Tel:029-88186182 Web:www.qixiangzhan.cn Email:sxvery@163.com

CLI mode....187
combined data message, *see* composite message
commands
?....92
(?)....84, 103
a....84, 93, 103
aAb....93
aC....96, 99
aCC....97
aD....98, 99
aI....94
aIU....137–141
aM....95, 99
aMC....96
aR....88, 101
aR0....88, 91, 115, 134
aR1....85, 90
aR2....86, 90
aR3....86, 90
aR4....139
aR5....87, 90
aRC....102
aRU....125, 129
aSU....131, 133, 151, 153
aTU....121, 124, 141
aWU....116, 144
aXU....73, 76
aXZ....79
aXZM....82
MWV....104
XDR....105
XZRI....81
XZRU....80
communication protocols....116
RS-232....70
RS-422....70
RS-485....70, 169
SDI-12....70, 168
communication settings....73, 76
compass, *see* aligning
compass safe distance....35
compatibility....28
components....20
composite data message....91, 115, 134
concurrent measurement....96
concurrent measurement with CRC....97
configuration parameters....208
configuration tool, *see* Vaisala Configuration Tool
connecting
M12 connector....73
screw terminal....73
service cable....71
several transmitters....168
connection cables....70
connectors....20
4-pin M8....23
8-pin M12....53, 59, 62, 73
analog input....135
continuous measurement....101, 102
corrosion protection....35
counter reset....129
CRC....89, 102
ASCII....199
CRC-16 computation....199

D

Data- / Data+....169
data communication interfaces....68
data message....133
getting....139
precipitation....86
retrieving....79
settings....124
wind....85
DC voltage range....53
derivated parameters and sampling....182
deviation angle....48

陕西威瑞仪器仪表有限公司 生产代理销售：实验检测设备 气象科学仪器设备
Tel:029-88186182 Web:www.qixiangzhan.cn Email:sxvery@163.com

device address..... 84, 103
disposal..... 218
DNV certificate..... 217
document version..... 13
driver, *see* Vaisala USB Instrument Driver

E

earthing, *see* grounding
economic power management..... 56
error..... 149, 151, 153
error messaging..... 133
ESD protection..... 28
external sensors..... 34
external temperature..... 34

F

factory configuration..... 202
failure..... 149
firmware update..... 186
fixing screw..... 20

G

gain..... 135, 139, 140
grounding..... 45
grounding point..... 20

H

hail..... 126
hail accumulation..... 129
hail intensity..... 31
handling..... 37
heated sensors..... 33
heater resistance..... 33
heating..... 27, 33, 153
heating control..... 131, 133
heating instant current..... 53
heating temperature..... 131, 134
heating voltage..... 53, 131, 134
holding registers..... 175
HUMICAP..... 32
humidity..... 86
humidity sensor..... 20, 121

I

input registers..... 176
installation site..... 35
installing
  maritime..... 35
  pyranometer..... 39
  USB cable driver..... 50
  Vaisala Configuration Tool..... 49
  WXT530..... 35
internal temperature..... 122
IP rating..... 24

J

jumper position..... 68

L

level measurement..... 34
level sensor settings..... 140
license key..... 49
lightning protection..... 25, 35
lightning rod, *see* air terminal
location..... 35

M

mA..... 141, 142
magnetic compass..... 35
magnetic North..... 46
maintenance
  WXT530..... 145
manual..... 13
maritime installation..... 35
mast length..... 35
mast location..... 35
maximum wind direction..... 134
maximum wind speed..... 134
measurement accuracy..... 27
measurement combination..... 15

陕西威瑞仪器仪表有限公司 生产代理销售：实验检测设备 气象科学仪器设备
Tel:029-88186182 Web:www.qixiangzhan.cn Email:sxvery@163.com

measurement failure....149
measurement interval....138
measuring
humidity....32
precipitation....31
pressure....32
PTU....32
temperature....32
memory stick....49
missing message....149
missing parameters....149
missing reading....153
Modbus....187
Modbus address....189
Modbus configuration....186
Modbus function codes....185
Modbus protocol....173
Modbus register maps....174
models
WXT531....15, 19
WXT532....15, 18
WXT533....15, 18
WXT534....15
WXT535....15
WXT536....15, 17
mounting
pole mast....24
sensor support arm....43
support arm....39
vertical pole mast....39
with mounting kit....41
mounting kit....24, 41, 205

N

negative gain....203
NMEA 0183 v3.0....102
automatic mode....114
checksum computation....199
NMEA 0183 v 3.0
query....170, 171
NMEA commands....121
North....46, 48
North arrow....39

O

operating voltage....153
optional features....22
options....15, 22, 166
order codes....166
overvoltage, *see* surge protector

P

package....37
parameters....208
precipitation....126
PTU....122
supervisor....131
wind....117
parameter selection....138, 140
peak intensity....31
piezoelectrical sensor....31
pinouts
analog input....135
screw terminal....59, 65
serial interfaces....59
polling with CRC....89
positive gain....203
power consumption....53, 56
power management....56
power supply....53
precipitation counter reset....80
precipitation intensity....81
precipitation measurement....31
precipitation sensor....20, 125
precipitation sensor modes....31
precipitation unit....129
pressure....86
pressure sensor....20, 121
pressure unit....124
problem....149

陕西威瑞仪器仪表有限公司 生产代理销售：实验检测设备 气象科学仪器设备
Tel:029-88186182 Web:www.qixiangzhan.cn Email:sxvery@163.com

product code....165
protocol, *see* communication protocols
Pt1000....32, 141
PTU....121
  configuration settings....203
  data message....86
  measurement principle....32
  module....32, 145
PTU measurement sampling....184
pulse length....202
pulses per mm....139

R

radiation shield....20, 39, 145
rain....126
  see also precipitation
rain accumulation....129
RAINCAP....31
rain configuration....203
rain counter....139
rain current....31
rain duration....31
rain gauge....34
rain measurement....31
read-only setting....202
recycling....218
replacing PTU module....145
reset limit....139
reset mode....139
resetting hail accumulation....80
resetting rain accumulation....80
resetting software....79
retrieving data messages....79
retrofit....28
RS-485 wiring....169
rubber plug....53

S

safety....28
sampling rate....30
screw cover....20, 39
SDI-12....168, 197
  continuous mode....91
  electrical interface....197
  native mode....91
  parameter order....141
  protocol....91, 197
  timing....197
  wiring....168
self-diagnostics....151
sending data....98
serial communication....73
serial connector....53
serial interfaces....53
serial number....165
service cable....71
Service Pack 2....71
service port....20, 71
setting fields....74
settings
  changing....119, 124, 129, 133
  checking....121
  data message....116
  PTU....121
  rain configuration....203
  sensor....116
  temperature....141
single transducer mode....202
snow accumulation, *see* heating
software, *see* Vaisala Configuration Tool
solar radiation....34, 140
starting measurement....95, 96
storage....35
strategy....202
supervisor message....131
supervisor settings....131, 204
supply voltage....131, 153
surge protector....25, 35

陕西威瑞仪器仪表有限公司 生产代理销售：实验检测设备 气象科学仪器设备
Tel:029-88186182 Web:www.qixiangzhan.cn Email:sxvery@163.com

T
temperature....86
below zero, *see* heating setting....141
temperature sensor....20, 121
temperature unit....124
terminal program....71
termination jumper....68
termination resistor....68
text message....151
text transmission....113
time slot....170
tip counter....139
trademark....14
transducer....20, 30
transducer measurement query....105
troubleshooting....149
true North....46
type label....165

U
units....82
unit setting....202
unpacking....37
update interval....124, 129, 131, 133, 138
updating firmware....186
USB cable driver....23, 50

V
Vaisala Configuration Tool....49, 71, 116, 135
Vaisala USB Instrument Driver....50
voltage range....53
volts / user unit....140

W
waste....218
WINDCAP....30
wind configuration....202
wind direction....30, 117
wind direction offset....48
wind direction query....104
wind filter bypass....203
wind measurement....30
wind measurement averaging method....200
wind measurement sampling....184
wind sensor....116
wind speed....30, 117
wind speed query....104
wiring....53
M12 connector....59
mA output....62
RS-232....62
RS-422....62
RS-485....62, 169
screw terminals....65
SDI-12....62, 168
WMT52, *see* backward compatibility
WSP150....25
WSP150/WSP152, *see* surge protector
WSP152....25
WXT520, *see* backward compatibility
WXT530
maintenance....145
specifications....154
WXT531....15, 19
WXT532....15, 18, 34, 141
WXT533....15, 18
WXT534....15, 18
WXT535....15, 18
WXT536....15, 17
components....20

X
XDR....169

Z
zero adjustment....202

陕西威瑞仪器仪表有限公司 生产代理销售：实验检测设备 气象科学仪器设备
Tel:029-88186182 Web:www.qixiangzhan.cn Email:sxvery@163.com

Warranty

For standard warranty terms and conditions, see www.vaisala.com/warranty.
Please observe that any such warranty may not be valid in case of damage due to normal wear and tear, exceptional operating conditions, negligent handling or installation, or unauthorized modifications. Please see the applicable supply contract or Conditions of Sale for details of the warranty for each product.

Recycling



Recycle all applicable material according to local regulations.

Technical support



Contact Vaisala technical support at helpdesk@vaisala.com. Provide at least the following supporting information as applicable:

- Product name, model, and serial number
- Software/Firmware version
- Name and location of the installation site
- Name and contact information of a technical person who can provide further information on the problem

For more information, see www.vaisala.com/support.

陕西威瑞仪器仪表有限公司 生产代理销售：实验检测设备 气象科学仪器设备
Tel:029-88186182 Web:www.qixiangzhan.cn Email:sxvery@163.com

陕西威瑞仪器仪表有限公司 生产代理销售：实验检测设备 气象科学仪器设备
Tel:029-88186182 Web:www.qixiangzhan.cn Email:sxvery@163.com

陕西威瑞仪器仪表有限公司 生产代理销售：实验检测设备 气象科学仪器设备
Tel:029-88186182 Web:www.qixiangzhan.cn Email:sxvery@163.com

VAISALA

www.vaisala.com

陕西威瑞仪器仪表有限公司 生产代理销售：实验检测设备 气象科学仪器设备
Tel:029-88186182 Web:www.qixiangzhan.cn Email:sxvery@163.com